Level Best

LASER GRADING BOX

PARTS MANUAL

FOR

TRACTOR BOX - SINGLE

APACHE

BSN1260

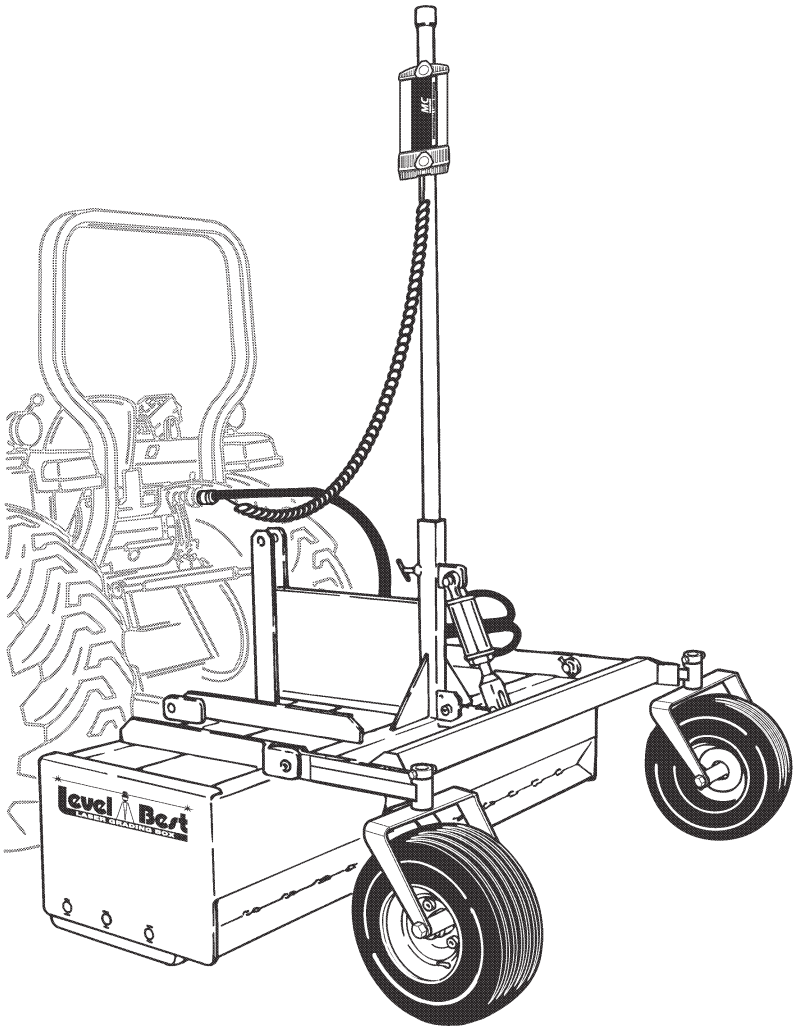

ATI Corporation
New Holland, PA 17557
Phone (717) 354-8721 • FAX (717) 354-2162
1-800-342-0905
www.level-best.com

JANUARY 2006

CAT.# LBSLGBPM-A-0106

ATI Corporation
New Holland, PA 17557
Phone (717) 3564-8721 • FAX (717 354-2162
1-800-342-0905
www.level-best.com

COPYRIGHT 2006 by
ATI Corporation
250 Earland Drive
New Holland, PA 17557 U.S.A.

DISCLAIMER

THE INFORMATION IN THIS MANUAL IS PROVIDED TO PROMOTE THE SAFE USE OF, AND ASSIST THE OPERATOR IN ACHIEVING THE BEST PERFORMANCE FROM, LASER GRADING BOX DESCRIBED HEREIN, FOR THEIR INTENDED APPLICATIONS.

ATI Corporation
New Holland, PA 17557
Phone (717) 3564-8721 • FAX (717 354-2162
1-800-342-0905
www.level-best.com

Laser Grading Box PARTS LIST

Standard Models

Part Number	Model Number	Description
315-003-000	LBS5	Box, Grader, Tractor, Single, 5', Cylinder Only
315-004-000	LBS6	Box, Grader, Tractor, Single, 6', Cylinder Only
315-005-000	LBS7	Box, Grader, Tractor, Single, 7', Cylinder Only
315-006-000	LBS8	Box, Grader, Tractor, Single, 8', Cylinder Only
000-166-360		Kit, Hydraulic, Single, Apache, Includes Valve Assembly, Hoses, Fittings & Solenoid Cable
000-200-095		Kit, Laser Controls, Single Tractor, Includes Single Panel, 360 Degree Receiver & Cables (Power, Receiver & Solenoid)

Laser Grading Box PARTS LIST

ATI Corporation
New Holland, PA 17557
Phone (717) 3564-8721 • FAX (717 354-2162
1-800-342-0905
www.level-best.com

Table of Contents

SUBJECT **PAGE NO.**

Standard Models ii

Table of Contents iii

WARRANTY iv

SERIAL NUMBER INFORMATION iv

WHERE TO GET PARTS AND SERVICE iv

HOW TO ORDER PARTS v

Notes vi

List Of Parts Illustrations 1

ATI Corporation
New Holland, PA 17557
Phone (717) 3564-8721 • FAX (717 354-2162
1-800-342-0905
www.level-best.com

Laser Grading Box PARTS LIST

WARRANTY

This Laser Grading Box is designed and manufactured to high quality standards. ATI Corporation, therefore, guarantees this Laser Grading Box to be free from defect in workmanship and materials for three years from purchase date. If the machine is used for rental purposes, the warranty is limited to ninety (90) days.

Vendored Components and Control Valve Parts are warranted separately by their respective manufacturers.

Does not cover normal wear or failure due to hydraulic oil contamination.

Misuse, abuse, misapplication, and unauthorized alterations will void this warranty.

All warranty work must be performed by an approved Level Best dealer, and authorized by ATI Corporation.

SERIAL NUMBER INFORMATION

It is very important that the correct serial number is provided when ordering parts. The serial number plate is located on the main frame. Please mark the model and serial number of your Laser Grading Box in the space provided below in case the plate on your Laser Grading Box gets lost or damaged.

Model..... **Serial Number** .....

Dealer Name ..... **Dealer Phone Number** .....

WHERE TO GET PARTS AND SERVICE

When replacement parts and service are required, ATI Corporation recommends returning to the dealer from which the product or optional kit was purchased. By going to the dealer, you are dealing with people that understand and know ATI products. Our dealers have the experience servicing these machines and stock the most common parts required to keep your equipment in top working condition.

NOTE: ATI Corporation reserves the right to discontinue models at any time, change specifications, and improve design without notice and without incurring obligation on goods previously purchased and to discontinue supplying any part listed, when the demand does not warrant production.

Laser Grading Box PARTS LIST

ATI Corporation
New Holland, PA 17557
Phone (717) 3564-8721 • FAX (717 354-2162
1-800-342-0905
www.level-best.com

HOW TO ORDER PARTS

Parts lists contained in this book have been prepared to help you when ordering spare and/or replacement parts. Your order will be filled promptly and accurately when the following information is provided:

1. Model and serial number of the unit. (This specifically identifies the equipment you have and permits us to verify the part numbers in your order.)
2. The parts list page number and catalog number. Include catalog revision number, if applicable.
3. The **Item** number for each part. **Item** numbers on the parts list page correspond with the numbers shown on the illustration.
4. **Part Number** as it appears in the parts list. In most cases this will be a nine-digit number; for example: 315-005-000.
5. The **Description** for the part as it appears on the parts list page.

When a complete assembly is needed, use the assembly number given in the parts list. If no assembly number is given, order by main assembly title and list only the item numbers you want. For example: “Wheel Frame Assembly per 315-509-000, Items 2 through 8, inclusive”.

The part ordered may have a new part number, or the part may have been replaced by a newer design with a different part number. In these cases your acknowledgement, shipping papers and invoices will be written listing the current part number first; the old part number you referred to will follow the part description.

Our purpose in doing this is to tell you that the parts are fully interchangeable. This will avoid any unnecessary correspondence or delay in processing your order. We suggest that you add any new number to your parts lists for future use.

ATI Corporation
New Holland, PA 17557
Phone (717) 3564-8721 • FAX (717 354-2162
1-800-342-0905
www.level-best.com

Laser Grading Box PARTS LIST

Notes

Laser Grading Box PARTS LIST

List Of Parts Illustrations

ATI Corporation
New Holland, PA 17557
Phone (717) 3564-8721 • FAX (717 354-2162
1-800-342-0905
www.level-best.com

Figure 1. Main Frame and Cutting Edges 2

Figure 2. Wheel Frame and Related Parts 4

Figure 3. Caster Fork and Wheel 6

Figure 4. Hydraulics Cylinder Only 8

Figure 5. Hydraulics With Optional Valve Assembly 10

Figure 6. Hydraulic Valve Assembly 12

Figure 7. Laser Controls and Related Parts 14

Figure 8. Control Panel, Receiver, Cables and Related Parts 16

Figure 9. Cylinder Assembly, 3" Bore x 6" Stroke 18

Figure 10. Scarifier Assembly (Optional) 20

Figure 11. Drawbar Kit, with Wheel Locks (Optional) 22

Figure 12. Back Blade Assembly - Hinged (Optional) 24

Figure 13. Decals 26

ATI Corporation
New Holland, PA 17557
Phone (717) 3564-8721 • FAX (717 354-2162
1-800-342-0905
www.level-best.com

Laser Grading Box PARTS LIST

Figure 1. Main Frame and Cutting Edges

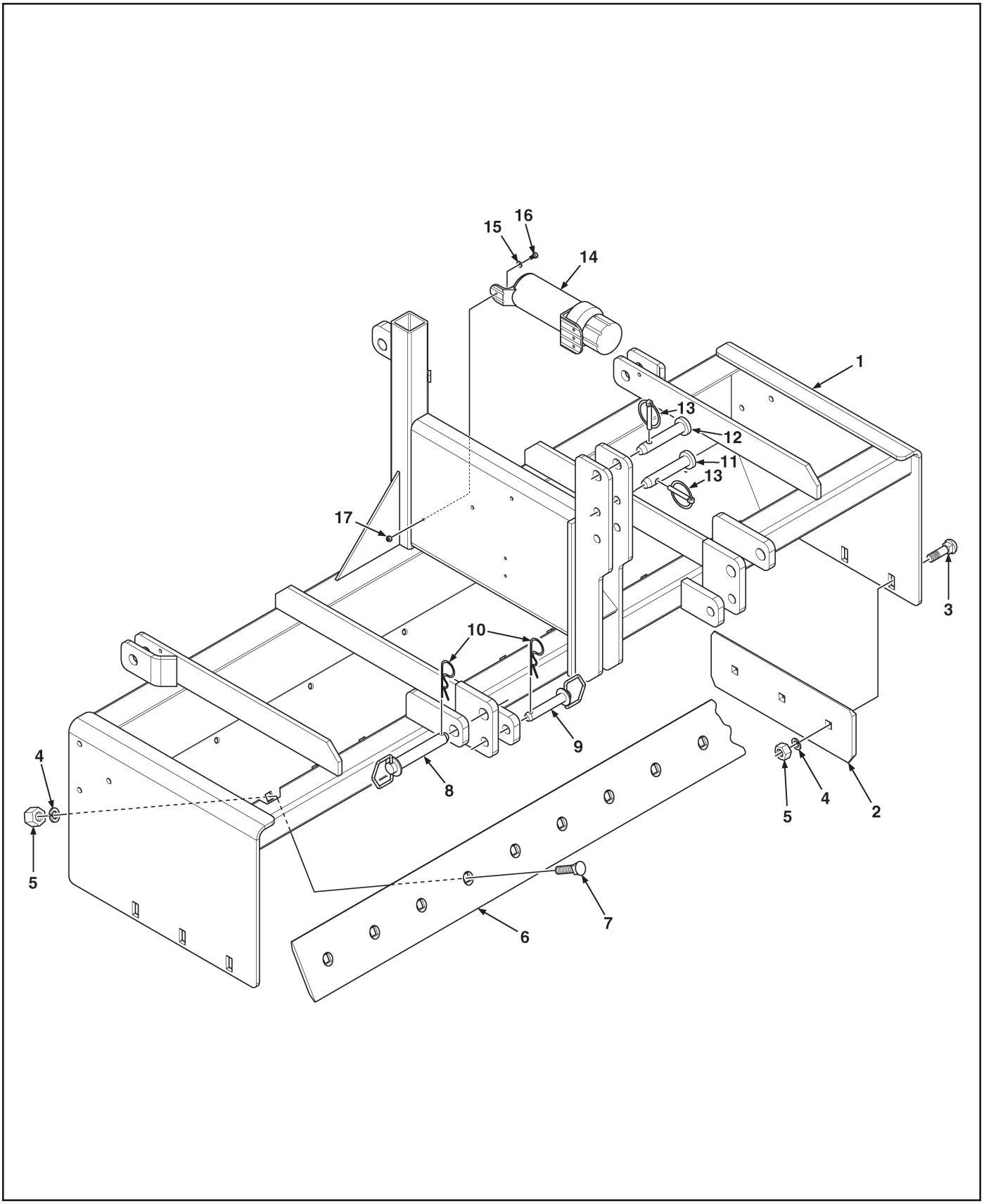

Laser Grading Box PARTS LIST

Figure 1. Main Frame and Cutting Edges

ATI Corporation
New Holland, PA 17557
Phone (717) 3564-8721 • FAX (717 354-2162
1-800-342-0905
www.level-best.com

Item	Part No.	Qty	Description
1	315-502-000	1	Frame, Main, Tractor, Single, 5'
	315-503-000	1	Frame, Main, Tractor, Single, 6'
	315-504-000	1	Frame, Main, Tractor, Single, 7'
	315-505-000	1	Frame, Main, Tractor, Single, 8'
2	000-190-072	2	Edge, Cutting, End, DBF, 19-1/2" Long
3	000-150-265	6	Bolt, Carriage, 5/8"-11UNC x 2" Long
4	000-155-077	AR	Washer, Lock, 5/8"
5	000-158-138	AR	Nut, Hex, 5/8"-11UNC
6	000-190-128	1	Edge, Cutting, DBF, 60" Long
	000-190-075	1	Edge, Cutting, DBF, 72" Long
	000-190-077	1	Edge, Cutting, DBF, 84" Long
	000-190-079	1	Edge, Cutting, DBF, 96" Long
7	000-150-263	AR	Bolt, Plow, 5/8"-11UNC x 2" Long
8	000-161-075	2	Pin, Hitch, 1-1/8" Dia. x 7" Long, Category II
9	000-161-076	2	Pin, Hitch, 7/8" Dia. x 5-1/4" Long, Category I
10	000-161-019	4	Pin, Hair, Cotter, 3/16" Dia. x 3-3/4" Long
11	000-161-081	1	Pin, Top Link, 3/4" Dia. x 5-1/2" Long, Category I
12	000-161-085	1	Pin, Top Link, 1" Dia. x 5-1/4" Long, Category II
13	000-161-028	2	Pin, Lynch, Locking, 7/16"
14	001-001-083	1	Canister, Operators Manual
15	LP	3	Washer, Flat, 1/4"
16	LP	3	Bolt, Hex Head, 1/4"-20UNC x 1" Long
17	LP	3	Nut, Hex, Nylon Lock, 1/4"-20UNC

AR - As Required NSS - Not Serviced Separately ASN - After Serial No. BSN - Before Serial No. LP - Local Purchase

ATI Corporation
New Holland, PA 17557
Phone (717) 3564-8721 • FAX (717 354-2162
1-800-342-0905
www.level-best.com

Laser Grading Box PARTS LIST

Figure 2. Wheel Frame and Related Parts

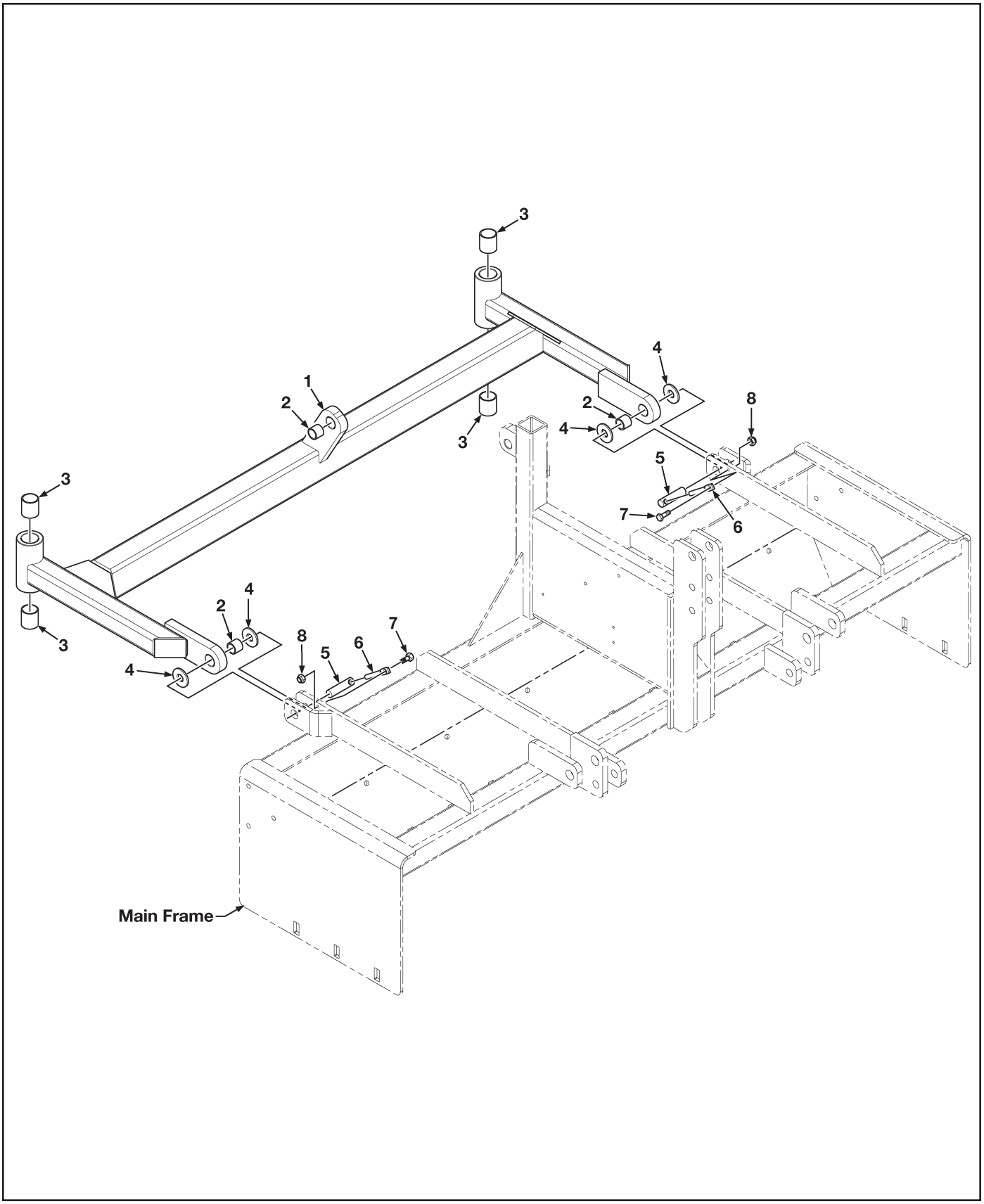

Laser Grading Box PARTS LIST

Figure 2. Wheel Frame and Related Parts

ATI Corporation
New Holland, PA 17557
Phone (717) 3564-8721 • FAX (717 354-2162
1-800-342-0905
www.level-best.com

Item	Part No.	Qty	Description
1	315-501-000	1	Frame, Wheel, Tractor, Single, 5'
	315-508-000	1	Frame, Wheel, Tractor, Single, 6'
	315-509-000	1	Frame, Wheel, Tractor, Single, 7' and 8'
			Includes Items 2 & 3
2	000-176-174	3	Bushing, Wheel Frame, 1-1/4" OD x 1" ID x 1" Long
3	000-176-171	4	Bushing, Wheel Frame, 1-3/4" OD x 1-1/2" ID x 1-1/2" Long
4	000-155-003	4	Washer, Flat, 1-1/2" OD x 1" ID x 14 Gauge Thick
5	000-161-065	2	Pin, Pivot, 1" Dia. x 3-1/4" Long
6	000-161-024	2	Pin, Retainer, 3/8" Dia. x 3-1/4" Long
7	LP	2	Bolt, Hex Head, 5/16"-18UNC x 1-1/4" Long
8	LP	2	Nut, Hex, Nylon Lock, 5/16"-18UNC

AR - As Required NSS - Not Serviced Separately ASN - After Serial No. BSN - Before Serial No. LP - Local Purchase

ATI Corporation
New Holland, PA 17557
Phone (717) 3564-8721 • FAX (717 354-2162
1-800-342-0905
www.level-best.com

Laser Grading Box PARTS LIST

Figure 3. Caster Fork and Wheel

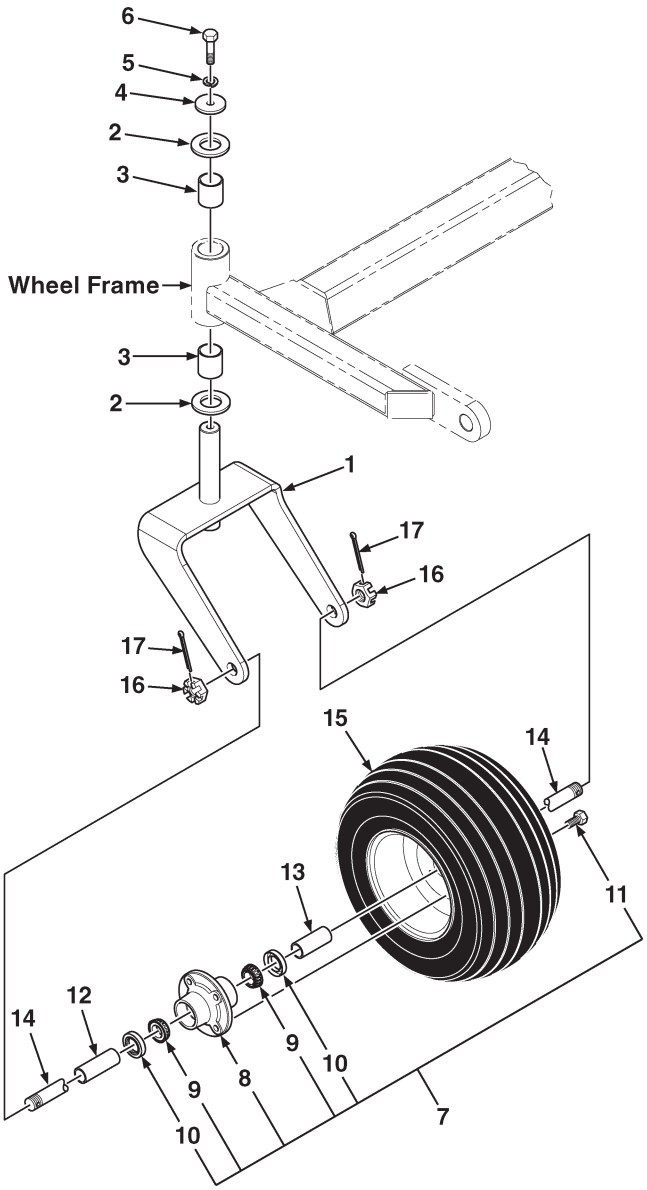

Laser Grading Box PARTS LIST

Figure 3. Caster Fork and Wheel

ATI Corporation
New Holland, PA 17557
Phone (717) 3564-8721 • FAX (717 354-2162
1-800-342-0905
www.level-best.com

Item	Part No.	Qty	Description
1	315-548-000	2	Fork, Caster
2	000-155-002	4	Washer, Flat, 2-1/4" OD x 1-1/2" ID x 10 Gauge Thick
3	000-176-171	4	Bushing, Wheel Frame, 1-3/4" OD x 1-1/2" ID x 1-1/2" Long
4	000-155-004	2	Washer, Flat, 2-1/4" OD x 17/32" ID x 1/4" Thick
5	LP	2	Washer, Lock, 1/2"
6	LP	2	Bolt, Hex Head, 1/2"-13UNC x 1-1/4" Long
7	001-001-069	2	Hub Assembly, Includes Items 8 thru 12
8	001-001-074	1	Hub, Wheel, With Outer Race
9	000-176-184	2	Bearing, Roller, Tapered, 1" Dia. Bore
10	000-166-457	2	Seal, Grease, 2" OD x 1-1/4" ID
11	LP	4	Bolt, Hex Head, 1/2"-20UNF x 1" Long
12	315-551-000	2	Spacer, Wheel Bearing, Long
13	315-552-000	2	Spacer, Wheel Bearing, Short
14	315-553-000	2	Shaft, Axle, Wheel, Roller Bearing
15	001-001-012	2	Wheel/Tire, 18/8.50-12
16	000-158-193	4	Nut, Castle, 1"-14UNF
17	LP	4	Pin, Cotter, 1/8" Dia. x 1-1/4" Long

AR - As Required NSS - Not Serviced Separately ASN - After Serial No. BSN - Before Serial No. LP - Local Purchase

ATI Corporation
New Holland, PA 17557
Phone (717) 3564-8721 • FAX (717 354-2162
1-800-342-0905
www.level-best.com

Laser Grading Box PARTS LIST

Figure 4. Hydraulics Cylinder Only

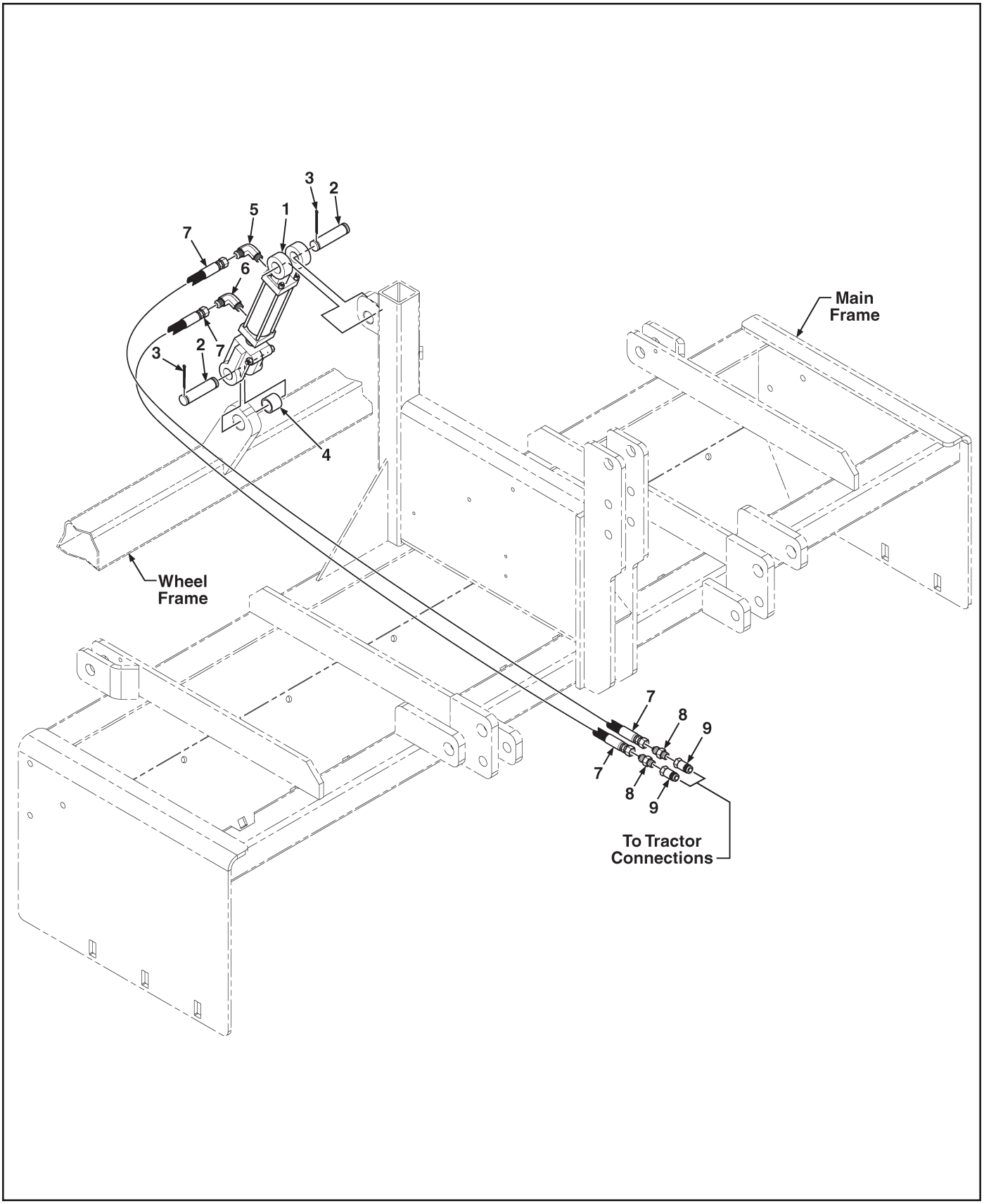

Laser Grading Box PARTS LIST

Figure 4. Hydraulics Cylinder Only

ATI Corporation
New Holland, PA 17557
Phone (717) 3564-8721 • FAX (717 354-2162
1-800-342-0905
www.level-best.com

Item	Part No.	Qty	Description
1	000-166-181	1	Cylinder, Hydraulic, 3" Bore x 6" Stroke, See Breakdown Figure 9, Includes Items 2 & 3
2	000-161-068	2	Pin, Cylinder, 1" Dia. x 3-3/8" Long
3	LP	4	Pin, Cotter, 3/16" Dia. x 1-3/4" Long
4	000-176-174	1	Bushing, Wheel Frame, 1-1/4" OD x 1" ID x 1" Long
5	000-166-488	1	Elbow, 90°, 6MJ x 8MB, With Orifice
6	000-166-417	1	Elbow, 90°, 6MJ x 8MB
7	000-166-453	2	Hose, 1/2" Dia. x 90" Long x 6FJX x 8FJX, 3,000 PSI
8	000-166-168	2	Adapter, Straight, 8MJ x 8MP
9	000-166-210	2	Coupler, Quick, Ag, Male, 1/2"
			BH-Bulkhead MP-Male Pipe FP-Female Pipe FPX-Female Pipe Swivel MB-Male O-Ring Boss FB-Female O-Ring Boss MJ-Male JIC FJ-Female JIC FJX-Female JIC Swivel

AR - As Required NSS - Not Serviced Separately ASN - After Serial No. BSN - Before Serial No. LP - Local Purchase

ATI Corporation
New Holland, PA 17557
Phone (717) 3564-8721 • FAX (717 354-2162
1-800-342-0905
www.level-best.com

Laser Grading Box PARTS LIST

Figure 5. Hydraulics With Optional Valve Assembly

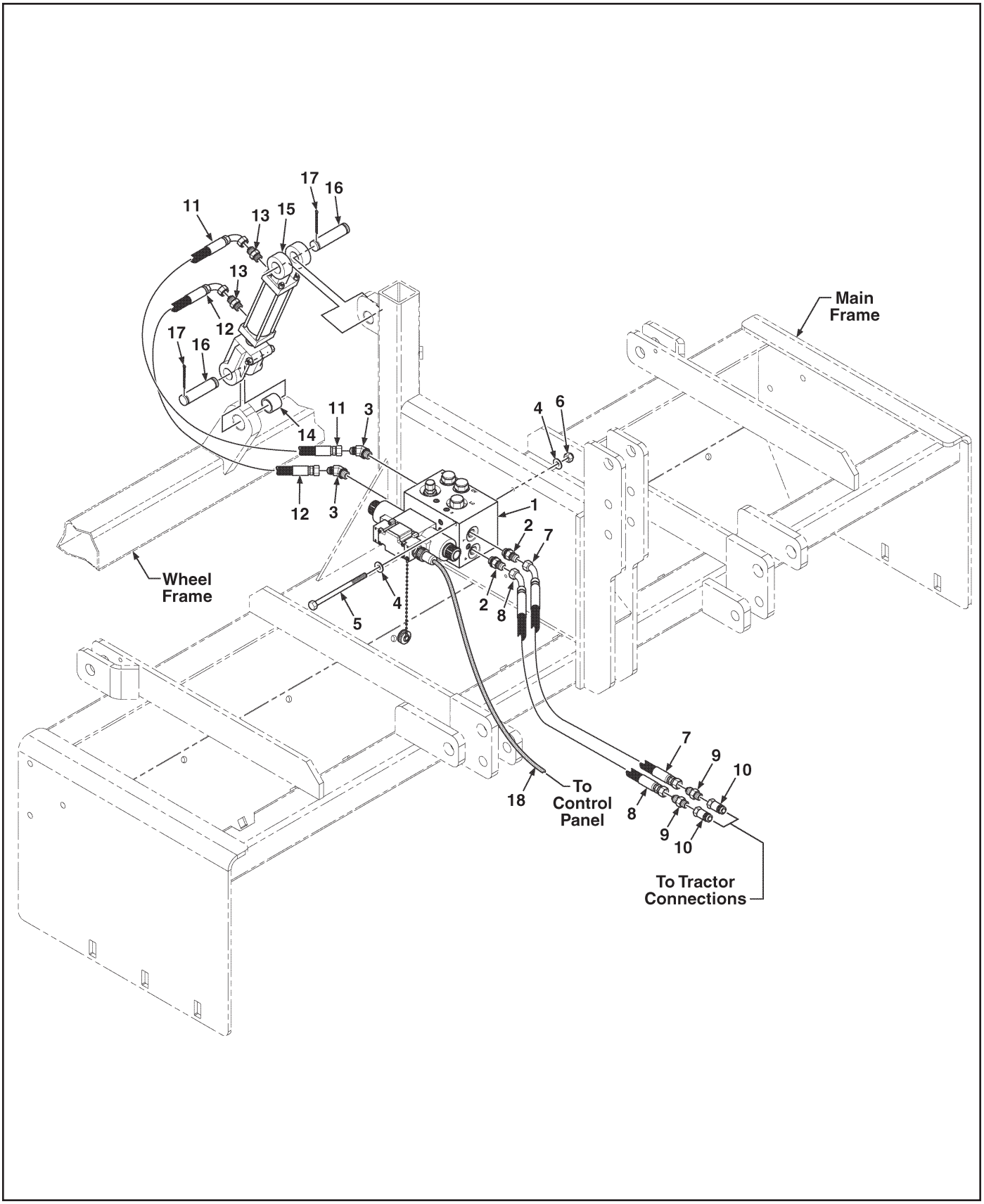

Laser Grading Box PARTS LIST

Figure 5. Hydraulics With Optional Valve Assembly

ATI Corporation
New Holland, PA 17557
Phone (717) 3564-8721 • FAX (717 354-2162
1-800-342-0905
www.level-best.com

Item	Part No.	Qty	Description
1	000-166-353	1	Valve Assembly, Hydraulic, Includes Items 2 & 3, See Breakdown Figure 6
2	000-166-170	2	Adapter, Straight, 8MJ x 8MB
3	000-166-175	2	Elbow, 45°, 6MJ x 6MB
4	LP	4	Washer, Flat, 5/16", SAE
5	LP	2	Bolt, Hex Head, 5/16"-18UNC x 5" Long
6	LP	2	Nut, Hex, Nylon Lock, 5/16"-18UNC
7	000-166-186	1	Hose, 1/2" Dia. x 52" Long x 8FJX x 8FJX45, 3,000 PSI
	000-166-254	1	Hose, 3/8" Dia. x 90" Long x 8FJX x 8FJX, 3,000 PSI (With Drawbar Option)
8	000-166-186	1	Hose, 1/2" Dia. x 52" Long x 8FJX x 8FJX45, 3,000 PSI
	000-166-254	1	Hose, 3/8" Dia. x 90" Long x 8FJX x 8FJX, 3,000 PSI (With Drawbar Option)
9	000-166-168	2	Adapter, Straight, 8MJ x 8MP
10	000-166-210	2	Coupler, Quick Disconnect, Ag, Male, 1/2"
11	000-166-185	1	Hose, 3/8" Dia. x 28" Long x 6FJX x 8FJX90, 3,000 PSI
12	000-166-185	1	Hose, 3/8" Dia. x 28" Long x 6FJX x 8FJX90, 3,000 PSI
13	000-166-170	2	Adapter, Straight, 8MJ x 8MB
14	000-176-174	1	Bushing, Wheel Frame, 1-1/4" OD x 1" ID x 1" Long
15	000-166-181	1	Cylinder, Hydraulic, 3" Bore x 6" Stroke, See Breakdown Figure 9
			Includes Items 16 & 17
16	000-161-068	2	Pin, Cylinder, 1" Dia. x 3-3/8" Long
17	LP	4	Pin, Cotter, 3/16" Dia. x 1-3/4" Long
18	000-200-106	1	Cable, Solenoid, 90° Connector, 12' Long
			BH-Bulkhead
			MP-Male Pipe
			FP-Female Pipe
			FPX-Female Pipe Swivel
			MB-Male O-Ring Boss
			FB-Female O-Ring Boss
			MJ-Male JIC
			FJ-Female JIC
			FJX-Female JIC Swivel

AR - As Required NSS - Not Serviced Separately ASN - After Serial No. BSN - Before Serial No. LP - Local Purchase

ATI Corporation
New Holland, PA 17557
Phone (717) 3564-8721 • FAX (717 354-2162
1-800-342-0905
www.level-best.com

Laser Grading Box PARTS LIST

Figure 6. Hydraulic Valve Assembly

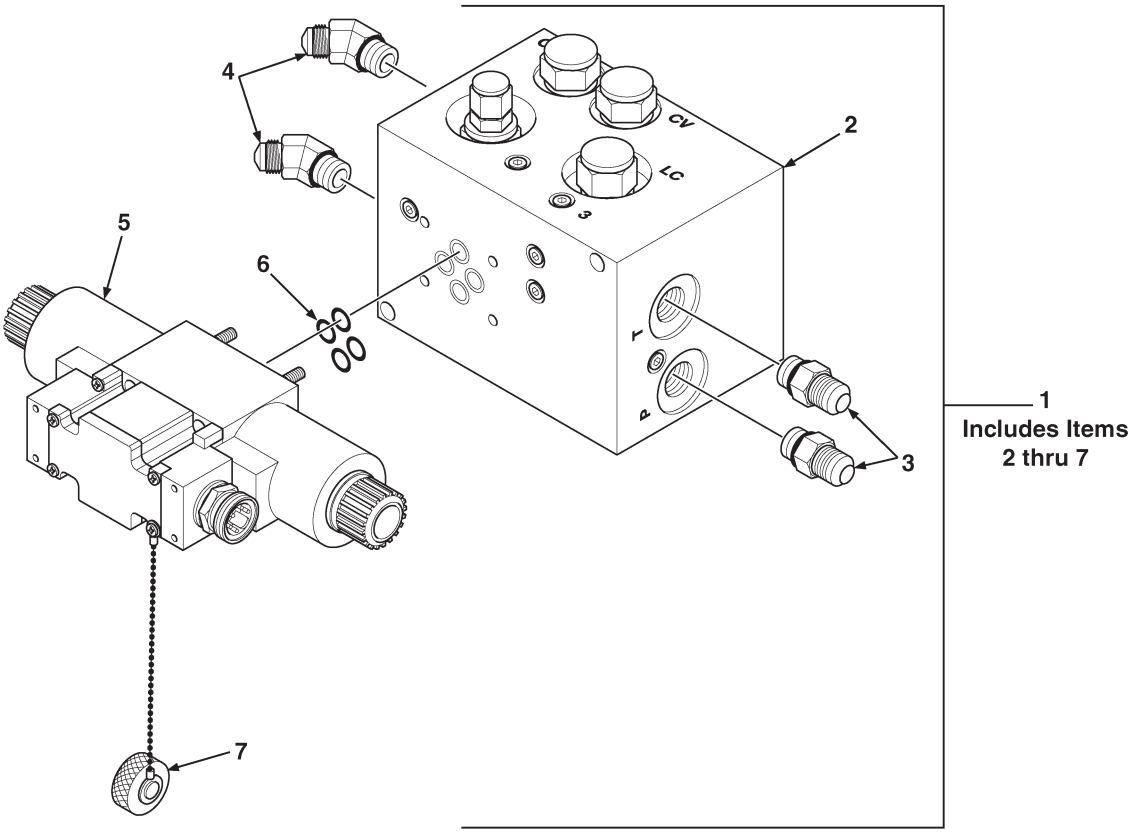

Laser Grading Box PARTS LIST

Figure 6. Hydraulic Valve Assembly

ATI Corporation
New Holland, PA 17557
Phone (717) 3564-8721 • FAX (717 354-2162
1-800-342-0905
www.level-best.com

Item	Part No.	Qty	Description
1	000-166-353	1	Valve Assembly, Hydraulic, Includes Items 2 thru 7
2	NSS	1	Manifold Block, Single
3	000-166-170	2	Adapter, Straight, 8MJ x 8MB
4	000-166-175	2	Elbow, 45°, 6MJ x 6MB
5	000-166-522	1	Valve, Directional, Includes Item 6
6	LP	4	O-Ring, Directional Valve
7	001-001-060	1	Cap, Quick Disconnect, with Chain

AR - As Required NSS - Not Serviced Separately ASN - After Serial No. BSN - Before Serial No. LP - Local Purchase

ATI Corporation
New Holland, PA 17557
Phone (717) 3564-8721 • FAX (717 354-2162
1-800-342-0905
www.level-best.com

Laser Grading Box PARTS LIST

Figure 7. Laser Controls and Related Parts

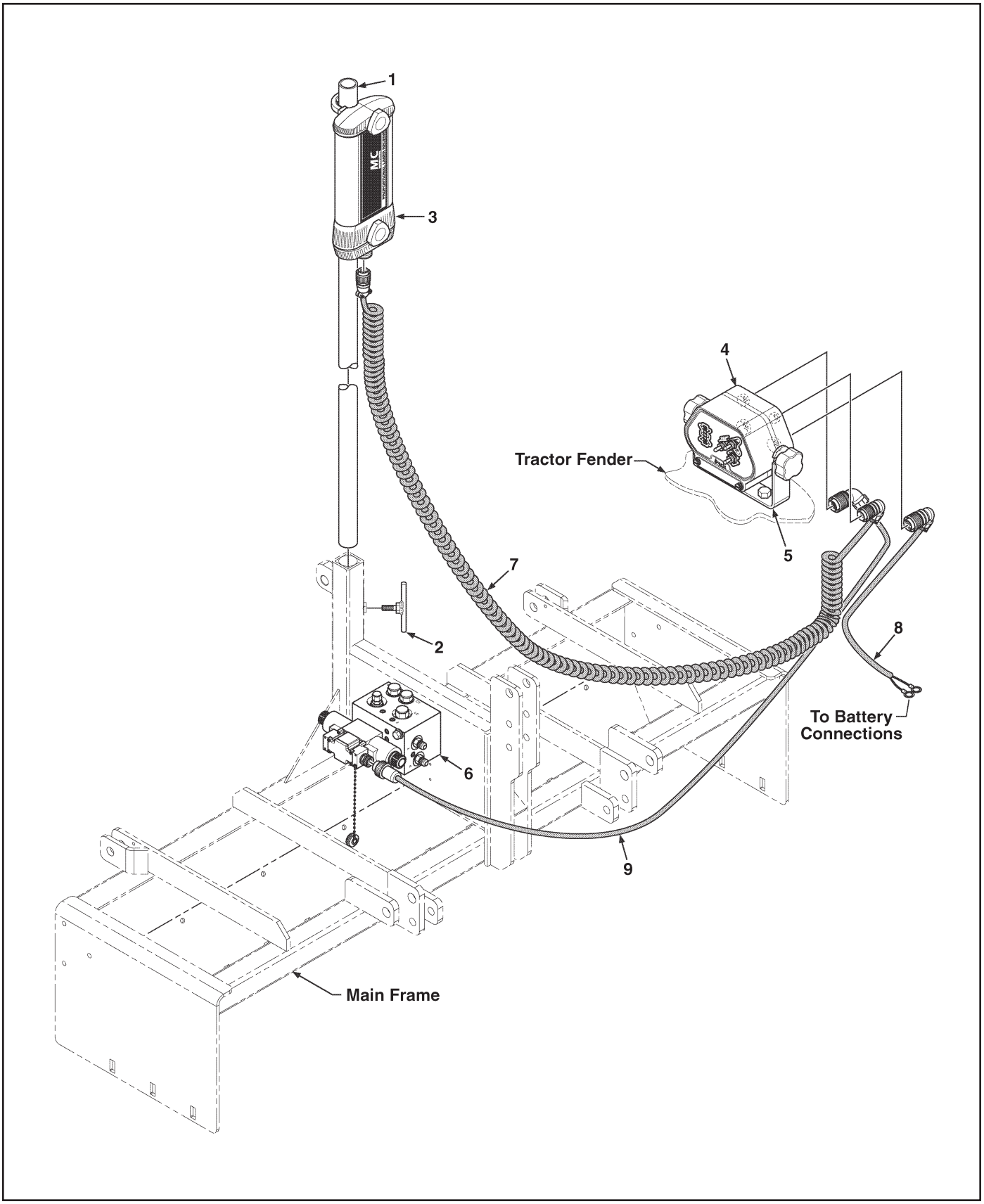

Laser Grading Box PARTS LIST

Figure 7. Laser Controls and Related Parts

ATI Corporation
New Holland, PA 17557
Phone (717) 3564-8721 • FAX (717 354-2162
1-800-342-0905
www.level-best.com

Item	Part No.	Qty	Description
1	001-001-052	1	Pole, Mast
2	001-001-053	1	Handle, Tee
3	000-200-093	1	Receiver, Bullseye 5MC
4	000-200-092	1	Panel, Control, See Breakdown Figure 8
5	001-001-075	1	Bracket, Control Panel
6	000-166-353	1	Valve Assembly, Hydraulic
7	000-200-099	1	Cable, Receiver, Coiled, 15' Long
8	000-200-097	1	Cable, Power, 2-Wire, 20' Long
9	000-200-106	1	Cable, Solenoid, 90° Connector, 12' Long

AR - As Required NSS - Not Serviced Separately ASN - After Serial No. BSN - Before Serial No. LP - Local Purchase

ATI Corporation
New Holland, PA 17557
Phone (717) 3564-8721 • FAX (717 354-2162
1-800-342-0905
www.level-best.com

Laser Grading Box PARTS LIST

Figure 8. Control Panel, Receiver, Cables and Related Parts

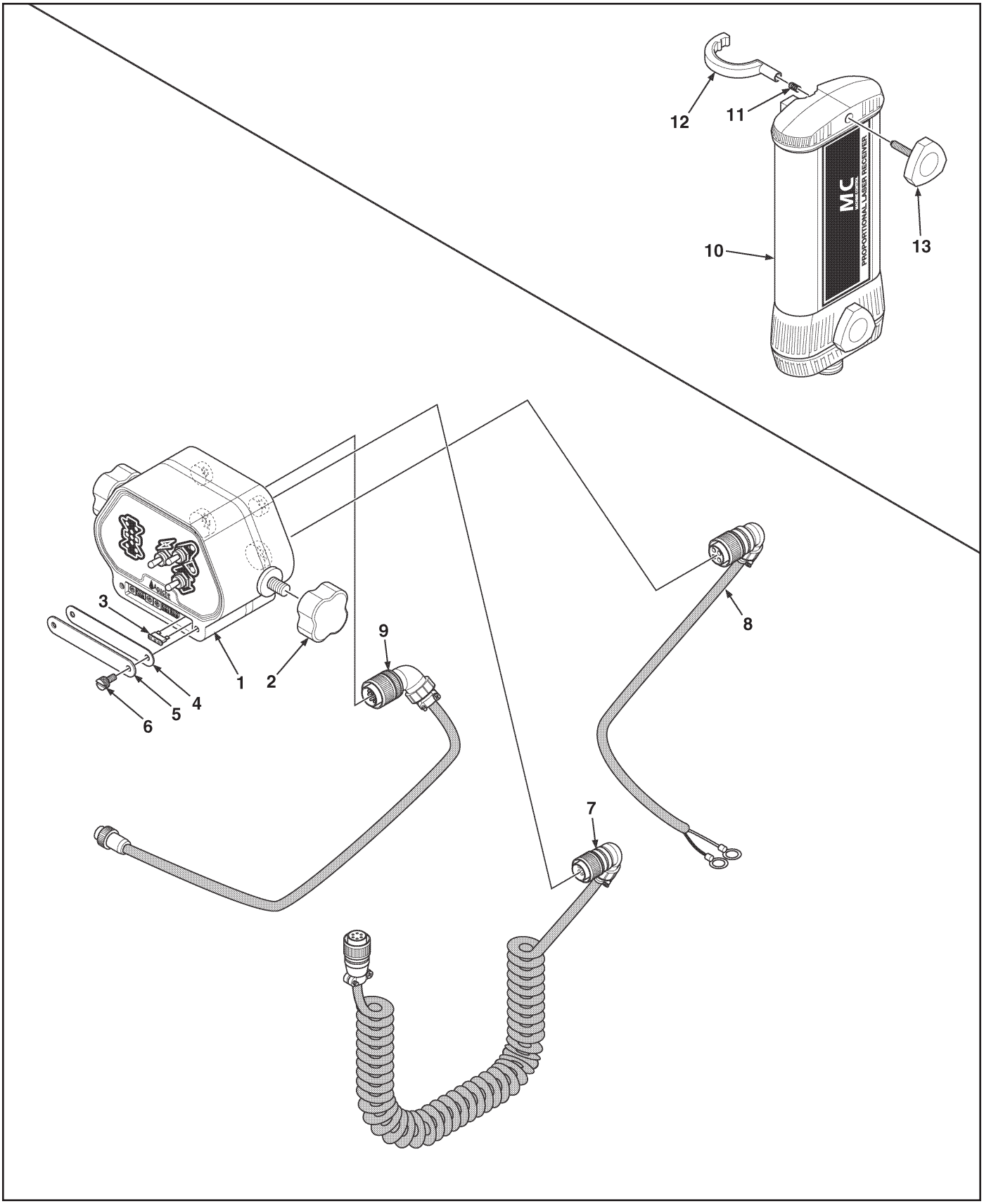

Laser Grading Box PARTS LIST

ATI Corporation
New Holland, PA 17557
Phone (717) 3564-8721 • FAX (717 354-2162
1-800-342-0905
www.level-best.com

Figure 8. Control Panel, Receiver, Cables and Related Parts

Item	Part No.	Qty	Description
1	000-200-092	1	Panel, Control, Includes Items 2 thru 6
2	000-200-112	2	Knob
3	LP	1	Fuse, 25 Amp
4	000-200-115	1	Gasket, Front Cover Plate
5	000-200-114	1	Plate, Front Cover
6	000-200-113	2	Screw, Thumb
7	000-200-099	1	Cable, Receiver, Coiled, 15' Long
8	000-200-097	1	Cable, Power, 2-Wire, 20' Long
9	000-200-106	1	Cable, Solenoid, 90° Connector, 12' Long
10	000-200-093	1	Receiver, Bullseye 5MC, Includes Items 11 thru 13
11	000-161-094	2	Spring, Clamp, Compression
12	000-200-108	2	Clamp, Universal, 2" Dia.
13	000-200-107	2	Knob, Clamp

AR - As Required NSS - Not Serviced Separately ASN - After Serial No. BSN - Before Serial No. LP - Local Purchase

ATI Corporation
New Holland, PA 17557
Phone (717) 3564-8721 • FAX (717 354-2162
1-800-342-0905
www.level-best.com

Laser Grading Box PARTS LIST

Figure 9. Cylinder Assembly, 3" Bore x 6" Stroke

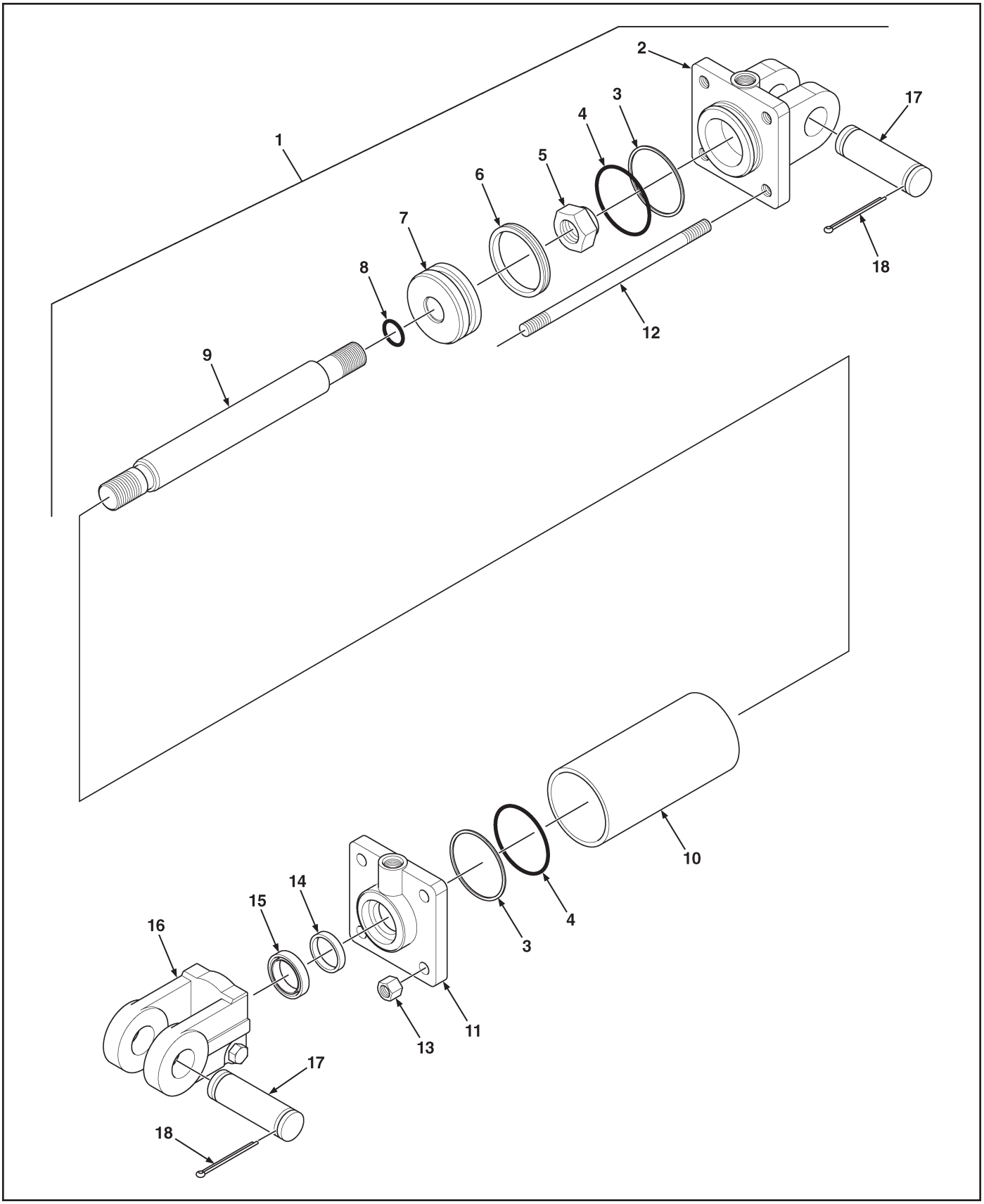

Laser Grading Box PARTS LIST

Figure 9. Cylinder Assembly, 3" Bore x 6" Stroke

ATI Corporation
New Holland, PA 17557
Phone (717) 3564-8721 • FAX (717 354-2162
1-800-342-0905
www.level-best.com

Item	Part No.	Qty	Description
1	000-166-181	1	Cylinder Assembly, 3" Bore x 6" Stroke, Includes Items 2 thru 18
2	000-166-322	1	Butt Assembly
3	NSS	2	Ring, Back Up
4	NSS	2	O-Ring
5	000-158-195	1	Nut, Lock
6	NSS	1	Seal, Crown
7	000-166-326	1	Piston
8	NSS	1	O-Ring
9	000-166-328	1	Rod Assembly
10	000-166-329	1	Tube
11	000-166-330	1	Gland
12	000-166-331	4	Tie Rod Assembly, Includes Item 13
13	NSS	4	Nut, Hex, Tie Rod
14	NSS	1	Seal, U-Cup
15	NSS	1	Seal, Wiper
16	000-166-334	1	Clevis Assembly
17	000-161-068	2	Pin, Cylinder, 1" Dia. x 3-3/8" Long
18	LP	4	Pin, Cotter, 3/16" Dia. x 1-3/4" Long
	000-166-207	AR	Kit, Cylinder Repair Includes: Items 3, 4, 6, 8, 14 & 15

AR - As Required NSS - Not Serviced Separately ASN - After Serial No. BSN - Before Serial No. LP - Local Purchase

ATI Corporation
New Holland, PA 17557
Phone (717) 3564-8721 • FAX (717 354-2162
1-800-342-0905
www.level-best.com

Laser Grading Box PARTS LIST

Figure 10. Scarifier Assembly (Optional)

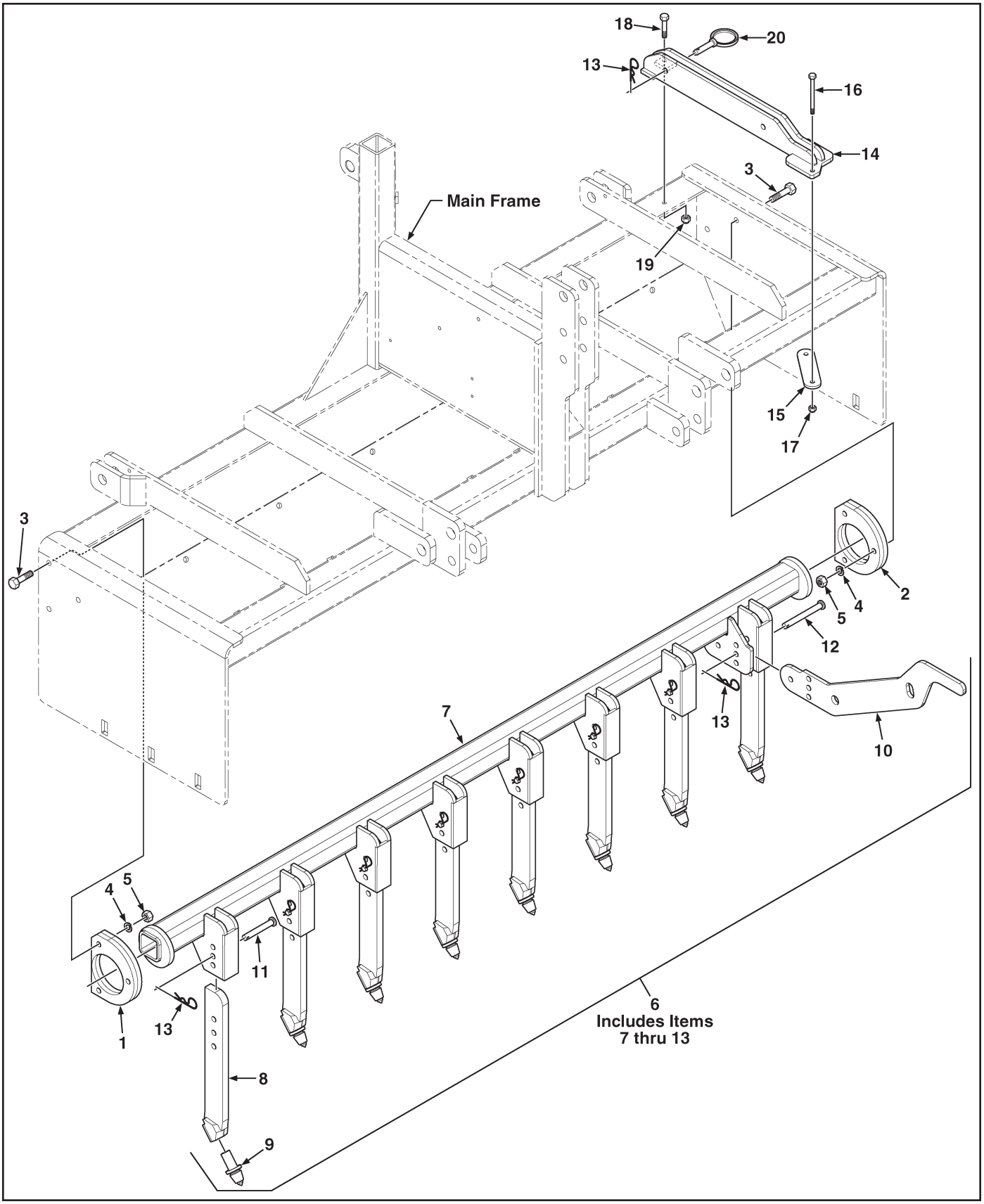

Laser Grading Box PARTS LIST

Figure 10. Scarifier Assembly (Optional)

ATI Corporation
New Holland, PA 17557
Phone (717) 3564-8721 • FAX (717 354-2162
1-800-342-0905
www.level-best.com

Item	Part No.	Qty	Description
	315-538-000	1	Kit, Scarifier Assembly, 6' Box
	315-539-000	1	Kit, Scarifier Assembly, 7' Box
	315-540-000	1	Kit, Scarifier Assembly, 8' Box
			Includes Items 1 thru 20
1	315-518-000	1	Block, Mounting, Right
2	315-517-000	1	Block, Mounting, Left
3	LP	6	Bolt, Hex Head, 1/2"-13UNC x 2" Long
4	LP	6	Washer, Lock, 1/2"
5	LP	6	Nut, Hex, 1/2"-13UNC
6	315-535-000	1	Bar Assembly, Scarifier, 6'
	315-536-000	1	Bar Assembly, Scarifier, 7' (Shown)
	315-537-000	1	Bar Assembly, Scarifier, 8'
			Includes Items 7 thru 13
7	315-513-000	1	Tube Assembly, Scarifier, Manual, 6'
	315-514-000	1	Tube Assembly, Scarifier, Manual, 7' (Shown)
	315-515-000	1	Tube Assembly, Scarifier, Manual, 8'
8	315-516-000	AR	Shank Assembly, With Bit Block
9	001-001-054	AR	Bit, Carbide-Tipped
10	315-513-008	1	Handle, Scarifier
11	000-161-072	AR	Pin, Clevis, 1/2" Dia. x 2" Long
12	000-161-073	1	Pin, Clevis, 1/2" Dia. x 3" Long
13	000-161-070	AR	Pin, Hair, Cotter, .120" x 2-3/8" Long
14	315-519-000	1	Latch Assembly, Handle, Scarifier
15	315-519-004	1	Bar, Clamp
16	LP	2	Bolt , Hex Head, 5/16"-18UNC x 4" Long
17	LP	2	Nut, Hex, Nylon Lock, 5/16"-18UNC
18	LP	1	Bolt, Hex Head, 3/8"-16UNC x 1-1/4" Long
19	LP	1	Nut, Hex, Nylon Lock, 3/8"-16UNC
20	000-161-074	1	Pin, Ring, Latch, 1/2" Dia. x 2" Long

AR - As Required NSS - Not Serviced Separately ASN - After Serial No. BSN - Before Serial No. LP - Local Purchase

ATI Corporation
New Holland, PA 17557
Phone (717) 3564-8721 • FAX (717 354-2162
1-800-342-0905
www.level-best.com

Laser Grading Box PARTS LIST

Figure 11. Drawbar Kit, with Wheel Locks (Optional)

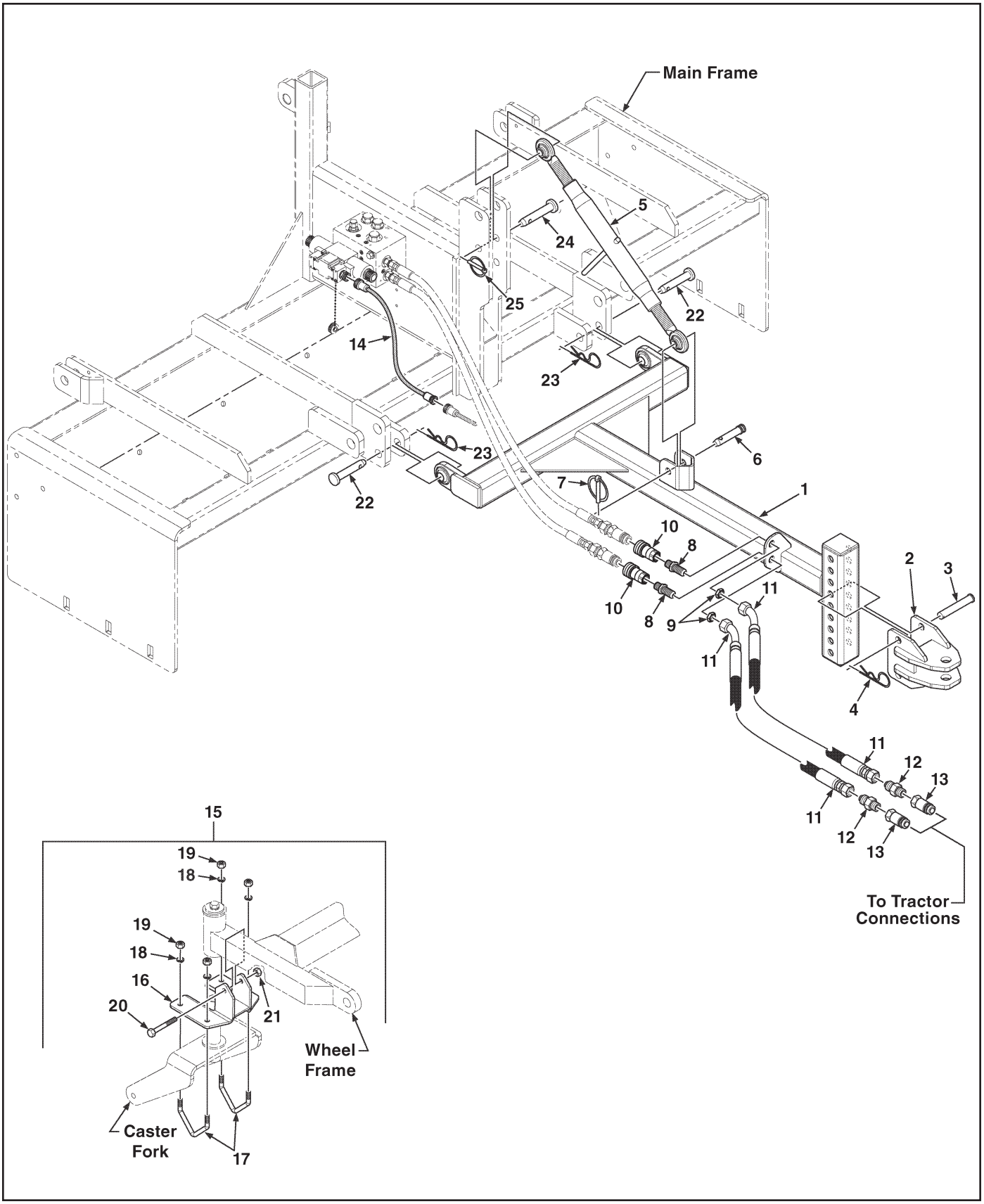

Laser Grading Box PARTS LIST

Level Best
LASER GRADING BOX
ATI Corporation
New Holland, PA 17557
Phone (717) 3564-8721 • FAX (717 354-2162
1-800-342-0905
www.level-best.com

Figure 11. Drawbar Kit, with Wheel Locks (Optional)

Item	Part No.	Qty	Description
	315-547-000	1	Kit, Drawbar, Category I, Includes Items 1 thru 21
1	315-541-000	1	Drawbar Weldment
2	315-542-000	1	Hitch, Clevis
3	000-161-079	2	Pin, Clevis, 3/4" Dia. x 4-1/2" Long
4	000-161-071	2	Pin, Cotter, Hair, .148" Dia. x 2-11/16" Long
5	001-001-064	1	Top Link
6	000-161-080	1	Pin, Top Link, 3/4" Dia. x 4-1/2" Long
7	000-161-028	1	Pin, Lynch, Locking, 7/16"
8	000-166-447	2	Connector, Bulkhead, 8MP x 8BH, Includes Item 9
9	NSS	2	Nut, Hex, Jam Lock
10	000-166-218	2	Coupler, Quick Disconnect, Ag, Female, 1/2" x 1/2" NPT
11	000-166-186	1	Hose, 1/2" Dia. x 52" Long x 8FJX x 8FJX45, 3,000 PSI
12	000-166-168	2	Adapter, Straight, 8MJ x 8MP
13	000-166-210	2	Coupler, Quick Disconnect, Ag, Male, 1/4"
14	000-200-173	1	Cable, Extension, Solenoid, 3' Long
15	315-544-000	2	Kit, Wheel Lock, Includes Items 10 thru 15
16	315-545-000	1	Wheel Lock Weldment
17	000-161-082	2	Bolt, V
18	LP	4	Washer, Lock, 1/2"
19	LP	4	Nut, Hex, 1/2"-13UNC
20	LP	1	Bolt, Hex Head, 1/2"-13UNC x 4" Long
21	LP	1	Nut, Hex, Nylon Lock, 1/2"-13UNC
22	000-161-076	2	Pin, Hitch, 7/8" Dia. x 5-1/4" Long, Category I
23	000-161-019	2	Pin, Hair, Cotter, 3/16" Dia. x 3-3/4" Long
24	000-161-081	1	Pin, Top Link, 3/4" Dia. x 5-1/2" Long, Category I
25	000-161-028	1	Pin, Lynch, Locking, 7/16"

BH-Bulkhead
MP-Male Pipe
FP-Female Pipe
FPX-Female Pipe Swivel
MB-Male O-Ring Boss
FB-Female O-Ring Boss
MJ-Male JIC
FJ-Female JIC
FJX-Female JIC Swivel

AR - As Required NSS - Not Serviced Separately ASN - After Serial No. BSN - Before Serial No. LP - Local Purchase

ATI Corporation
New Holland, PA 17557
Phone (717) 3564-8721 • FAX (717 354-2162
1-800-342-0905
www.level-best.com

Laser Grading Box PARTS LIST

Figure 12. Back Blade Assembly - Hinged (Optional)

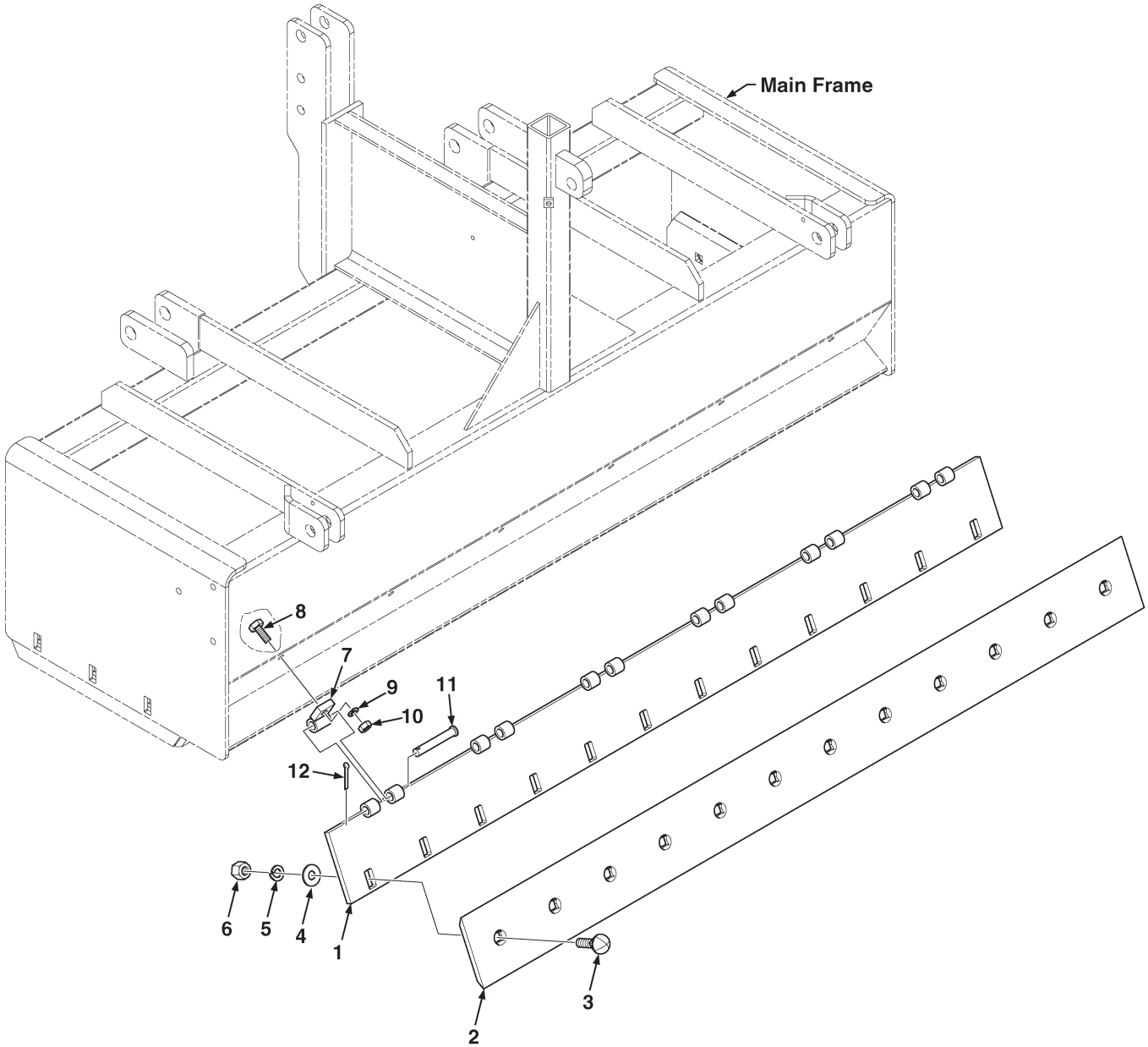

Laser Grading Box PARTS LIST

Figure 12. Back Blade Assembly - Hinged (Optional)

ATI Corporation
New Holland, PA 17557
Phone (717) 3564-8721 • FAX (717 354-2162
1-800-342-0905
www.level-best.com

Item	Part No.	Qty	Description
	000-190-131	1	Back Blade Assembly, 60" Long, Includes Items 1 thru 12
	000-190-132	1	Back Blade Assembly, 72" Long, Includes Items 1 thru 12
	000-190-133	1	Back Blade Assembly, 84" Long, Includes Items 1 thru 12
	000-190-134	1	Back Blade Assembly, 96" Long, Includes Items 1 thru 12
1	315-562-000	1	Bracket, Mounting, Rear, Hinged, 60" Long
	315-558-000	1	Bracket, Mounting, Rear, Hinged, 72" Long
	315-559-000	1	Bracket, Mounting, Rear, Hinged, 84" Long
	315-560-000	1	Bracket, Mounting, Rear, Hinged, 96" Long
2	000-190-128	1	Edge, Cutting, DBF, 60" Long
	000-190-075	1	Edge, Cutting, DBF, 72" Long
	000-190-077	1	Edge, Cutting, DBF, 84" Long
	000-190-079	1	Edge, Cutting, DBF, 96" Long
3	000-150-263	AR	Bolt, Plow, 5/8"-11UNC x 2" Long
4	LP	AR	Washer, Flat, 5/8"
5	000-155-077	AR	Washer, Lock, 5/8"
6	000-158-138	AR	Nut, Hex, 5/8"-11UNC
7	315-561-000	AR	Hinge, Back Blade
8	LP	AR	Bolt, Hex Head, 1/2"-13UNC x 1-1/2" Long
9	LP	AR	Washer, Lock, 1/2"
10	LP	AR	Nut, Hex, 1/2"-13UNC
11	000-161-008	AR	Pin, Clevis, 5/8" Dia. x 4" Long
12	LP	AR	Pin, Cotter, 1/8" Dia. x 1-1/4" Long

AR - As Required NSS - Not Serviced Separately ASN - After Serial No. BSN - Before Serial No. LP - Local Purchase

ATI Corporation
New Holland, PA 17557
Phone (717) 3564-8721 • FAX (717 354-2162
1-800-342-0905
www.level-best.com

Laser Grading Box PARTS LIST

Figure 13. Decals

Laser Grading Box PARTS LIST

Figure 13. Decals

ATI Corporation
New Holland, PA 17557
Phone (717) 3564-8721 • FAX (717 354-2162
1-800-342-0905
www.level-best.com

Item	Part No.	Qty	Description
1	000-186-045	2	Decal, Level Best Logo
2	000-186-041	1	Decal, Warning, High Pressure
3	000-186-047	2	Decal, Danger, This Machine Starts & Stops Automatically
4	000-186-048	2	Decal, Made in U.S.A.
5	000-186-035	1	Plate, Model/Serial, Adhesive Back
6	000-186-035	1	Plate, Model/Serial, Adhesive Back

AR - As Required NSS - Not Serviced Separately ASN - After Serial No. BSN - Before Serial No. LP - Local Purchase