Level Best

LASER GRADING BOX

PARTS MANUAL

FOR

PARA-LEVEL with SLOPE-TACH ADAPTER

APACHE/SPECTRA, MEI/MIKROFYN, TRIMBLE & TOPCON

ASN1500

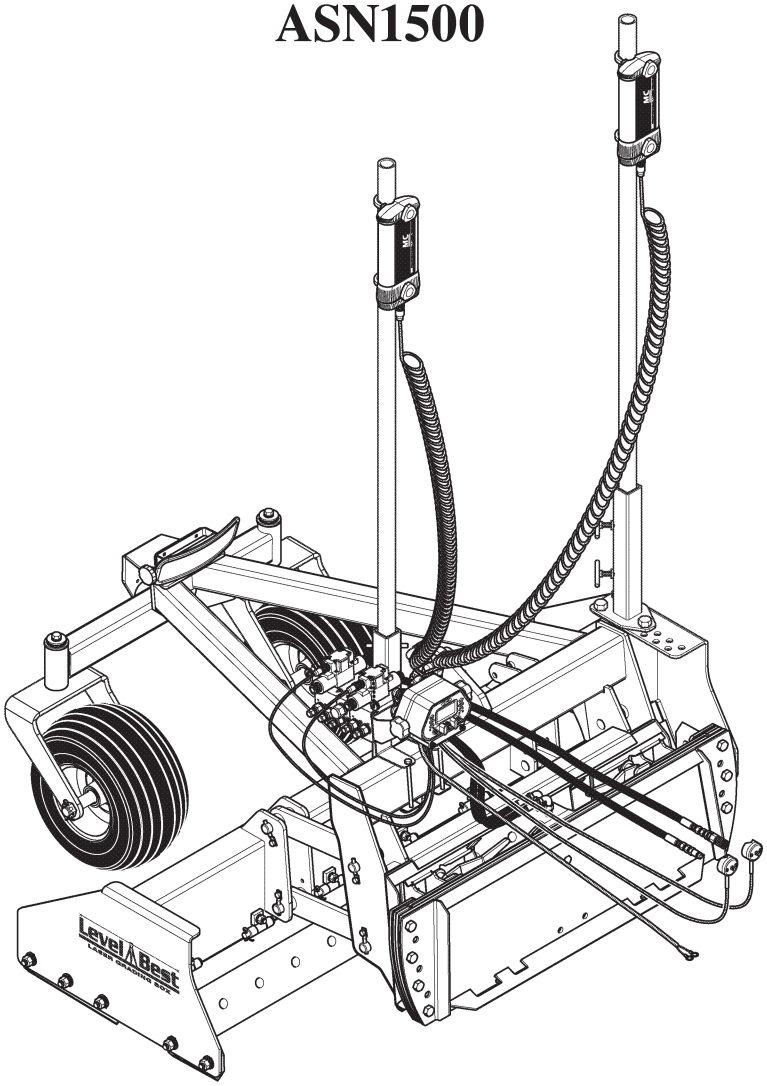

ATI Corporation
New Holland, PA 17557
Phone (717) 354-8721 • FAX (717) 354-2162
1-800-342-0905
www.level-best.com

SEPTEMBER 2007

CAT.#LBPL-STLGBPM-0907

ATI Corporation
New Holland, PA 17557
Phone (717) 354-8721 • FAX (717) 354-2162
1-800-342-0905
www.level-best.com

COPYRIGHT 2007 by
ATI Corporation
250 Earland Drive
New Holland, PA 17557 U.S.A.

DISCLAIMER

THE INFORMATION IN THIS MANUAL IS PROVIDED TO PROMOTE THE SAFE USE OF, AND ASSIST THE OPERATOR IN ACHIEVING THE BEST PERFORMANCE FROM, PARA-LEVEL GRADING BOX DESCRIBED HEREIN, FOR THEIR INTENDED APPLICATIONS.

Level Best
LASER GRADING BOX
ATI Corporation
New Holland, PA 17557
Phone (717) 354-8721 • FAX (717) 354-2162
1-800-342-0905
www.level-best.com

Para-Level Grading Box PARTS LIST

STANDARD MODELS

Part Number	Model Number	Description
315-067-000	PL72	Box, Grader, Para-Level, Single, 6', Cylinder Only
315-068-000	PL84	Box, Grader, Para-Level, Single, 7', Cylinder Only
315-069-000	PL96	Box, Grader, Para-Level, Single, 8', Cylinder Only
315-081-000	PL72D	Box, Grader, Para-Level, 6', Cylinder Only, with Slope-Tach
315-082-000	PL84D	Box, Grader, Para-Level, 7', Cylinder Only, with Slope-Tach
315-083-000	PL96D	Box, Grader, Para-Level, 8', Cylinder Only, with Slope-Tach
100-182-000		Slope-Tach Assembly
000-166-471		Kit, Hydraulic, Single Apache/Spectra, Includes Valve Assembly, Hoses, Fittings, Solenoid Cable and Remote Switch
000-166-475		Kit, Hydraulic, Double Apache/Spectra, Includes Valve Assembly, Hoses, Fittings and Solenoid Cable
000-166-474		Kit, Hydraulic, Single MEI/Mikrofyn, Includes Valve Assembly, Hoses, Fittings and Solenoid Cable
000-166-479		Kit, Hydraulic, Double MEI/Mikrofyn, Includes Valve Assembly, Hoses, Fittings and Solenoid Cables
000-166-473		Kit, Hydraulic, Single Topcon, Includes Valve Assembly, Hoses, Fittings, System Five Remote, Power and Solenoid Cable (does not include Receiver Cable)
000-166-477		Kit, Hydraulic, Double Topcon, Includes Valve Assembly, Hoses, Fittings, System Five Remote, Power and Solenoid Cables (does not include Receiver Cables)
000-166-482		Kit, Hydraulic, Single Trimble GCR, Includes Valve Assembly, Hoses, and Fittings
000-166-485		Kit, Hydraulic, Double Trimble GCR, Includes Valve Assembly, Hoses, and Fittings
000-200-096		Kit, Laser Controls, Single, Apache, Includes CB26 Control Panel, 360° Receiver, Power Cable and Receiver Cable
000-200-188		Kit, Laser Controls, Double, Apache, Includes CB52 Control Panel, 2-360 Degree Receivers, Power Cable, Receiver Cables, Junction Block and Remote Switches
000-200-218		Kit, Laser Controls, Single, Spectra, Includes CB25 Control Panel, 360° Receiver, Power Cable and Receiver Cable
000-200-219		Kit, Laser Controls, Double, Spectra, Includes CB30 Control Panel, 2-360° Degree Receivers, Power Cable, Receiver Cable, Junction Block and Remote Switches
000-200-148		Kit, Cables, Trimble GCR, Includes Junction Box with Solenoid Cable and Remote, Receiver Cable and Power Cable
315-575-000		Tractor Hitch

Para-Level Grading Box PARTS LIST

ATI Corporation
New Holland, PA 17557
Phone (717) 354-8721 • FAX (717) 354-2162
1-800-342-0905
www.level-best.com

TABLE OF CONTENTS

SUBJECT **PAGE NO.**

STANDARD MODELS ii

TABLE OF CONTENTS iii

WARRANTY iv

SERIAL NUMBER INFORMATION PARA-LEVEL iv

SERIAL NUMBER INFORMATION SLOPE-TACH iv

WHERE TO GET PARTS AND SERVICE iv

HOW TO ORDER PARTS v

NOTES vi

LIST OF PARTS ILLUSTRATIONS 1

ATI Corporation
New Holland, PA 17557
Phone (717) 354-8721 • FAX (717) 354-2162
1-800-342-0905
www.level-best.com

Para-Level Grading Box PARTS LIST

WARRANTY

This Para-Level Grading Box is designed and manufactured to high quality standards. ATI Corporation, therefore, guarantees this Para-Level Grading Box to be free from defect in workmanship and materials for one year from purchase date. **If the machine is used for rental purposes, the warranty is limited to ninety (90) days.**

Vendored Components and Control Valve Parts are warranted separately by their respective manufacturers.

Does not cover normal wear or failure due to hydraulic oil contamination.

Misuse, abuse, misapplication, and unauthorized alterations will void this warranty.

All warranty work must be performed by an approved Level Best dealer, and authorized by ATI Corporation.

SERIAL NUMBER INFORMATION PARA-LEVEL

It is very important that the correct serial number is provided when ordering parts. The serial number plate is located on the main frame. Please mark the model and serial number of your Para-Level Grading Box in the space provided below in case the plate on your Para-Level Grading Box gets lost or damaged.

Model..... **Serial Number** .....

Dealer Name ..... **Dealer Phone Number** .....

SERIAL NUMBER INFORMATION SLOPE-TACH

It is very important that the correct serial number is provided when ordering parts. The serial number plate is located on the tilt frame. Please mark the model and serial number of your Slope-Tach adapter in the space provided below in case the plate on the Slope-Tach adapter is lost or damaged.

Model..... **Serial Number** .....

Dealer Name ..... **Dealer Phone Number** .....

WHERE TO GET PARTS AND SERVICE

When replacement parts and service are required, ATI Corporation recommends returning to the dealer from which the product or optional kit was purchased. By going to the dealer, you are dealing with people that understand and know ATI products. Our dealers have the experience servicing these machines and stock the most common parts required to keep your equipment in top working condition.

NOTE: ATI Corporation reserves the right to discontinue models at any time, change specifications, and improve design without notice and without incurring obligation on goods previously purchased and to discontinue supplying any part listed, when the demand does not warrant production.

Para-Level Grading Box PARTS LIST

ATI Corporation
New Holland, PA 17557
Phone (717) 354-8721 • FAX (717) 354-2162
1-800-342-0905
www.level-best.com

HOW TO ORDER PARTS

Parts lists contained in this book have been prepared to help you when ordering spare and/or replacement parts. Your order will be filled promptly and accurately when the following information is provided:

1. Model and serial number of the unit. (This specifically identifies the equipment you have and permits us to verify the part numbers in your order.)
2. The parts list page number and catalog number. Include catalog revision number, if applicable.
3. The **Item** number for each part. **Item** numbers on the parts list page correspond with the numbers shown on the illustration.
4. **Part Number** as it appears in the parts list. In most cases this will be a nine-digit number; for example: 315-005-000.
5. The **Description** for the part as it appears on the parts list page.

When a complete assembly is needed, use the assembly number given in the parts list. If no assembly number is given, order by main assembly title and list only the item numbers you want. For example: "Wheel Frame Assembly per 315-509-000, Items 2 through 8, inclusive".

The part ordered may have a new part number, or the part may have been replaced by a newer design with a different part number. In these cases your acknowledgement, shipping papers and invoices will be written listing the current part number first; the old part number you referred to will follow the part description.

Our purpose in doing this is to tell you that the parts are fully interchangeable. This will avoid any unnecessary correspondence or delay in processing your order. We suggest that you add any new number to your parts lists for future use.

ATI Corporation
New Holland, PA 17557
Phone (717) 354-8721 • FAX (717) 354-2162
1-800-342-0905
www.level-best.com

Para-Level Grading Box PARTS LIST

NOTES

Para-Level Grading Box PARTS LIST

LIST OF PARTS ILLUSTRATIONS

ATI Corporation
New Holland, PA 17557
Phone (717) 354-8721 • FAX (717) 354-2162
1-800-342-0905
www.level-best.com

Figure 1. Main Frame and Cutting Edges 2

Figure 2. Attachment Frame and Related Parts 4

Figure 3. Caster Fork and Wheel 6

Figure 4. Hydraulics Cylinder Only 8

Figure 5. Hydraulics With Optional Valve Assembly 10

Figure 6. Hydraulic Valve Assembly 12

Figure 7. Hydraulic Slope-Tach 14

Figure 8. Slope-Tach QA-ST2 Assembly 16

Figure 9. Slope-Tach QA-ST1 Assembly 18

Figure 10. Slope-Tach Hydraulics and Related Parts 20

Figure 11. Laser Controls - Apache CB52/Spectra CB30 22

Figure 12. Laser Controls - Apache CB26/Spectra CB25 24

Figure 13. Control Panel - Apache CB52/Spectra CB30 26

Figure 14. Control Panel - Apache CB26/Spectra CB25 28

Figure 15. Laser Controls - Topcon 30

Figure 16. Laser Controls - Trimble GCR 32

Figure 17. Optional Scarifier Assembly 34

Figure 18. Cylinder Assembly, 3" Bore x 6" Stroke 36

Figure 19. Cylinder Assembly, 2-1/4" Bore x 6" Stroke 38

Figure 20. Cylinder Assembly, 1-3/4" Bore x 6" Stroke 40

Figure 21. Decals 42

ATI Corporation
New Holland, PA 17557
Phone (717) 354-8721 • FAX (717) 354-2162
1-800-342-0905
www.level-best.com

Para-Level Grading Box PARTS LIST

Figure 1. Main Frame and Cutting Edges

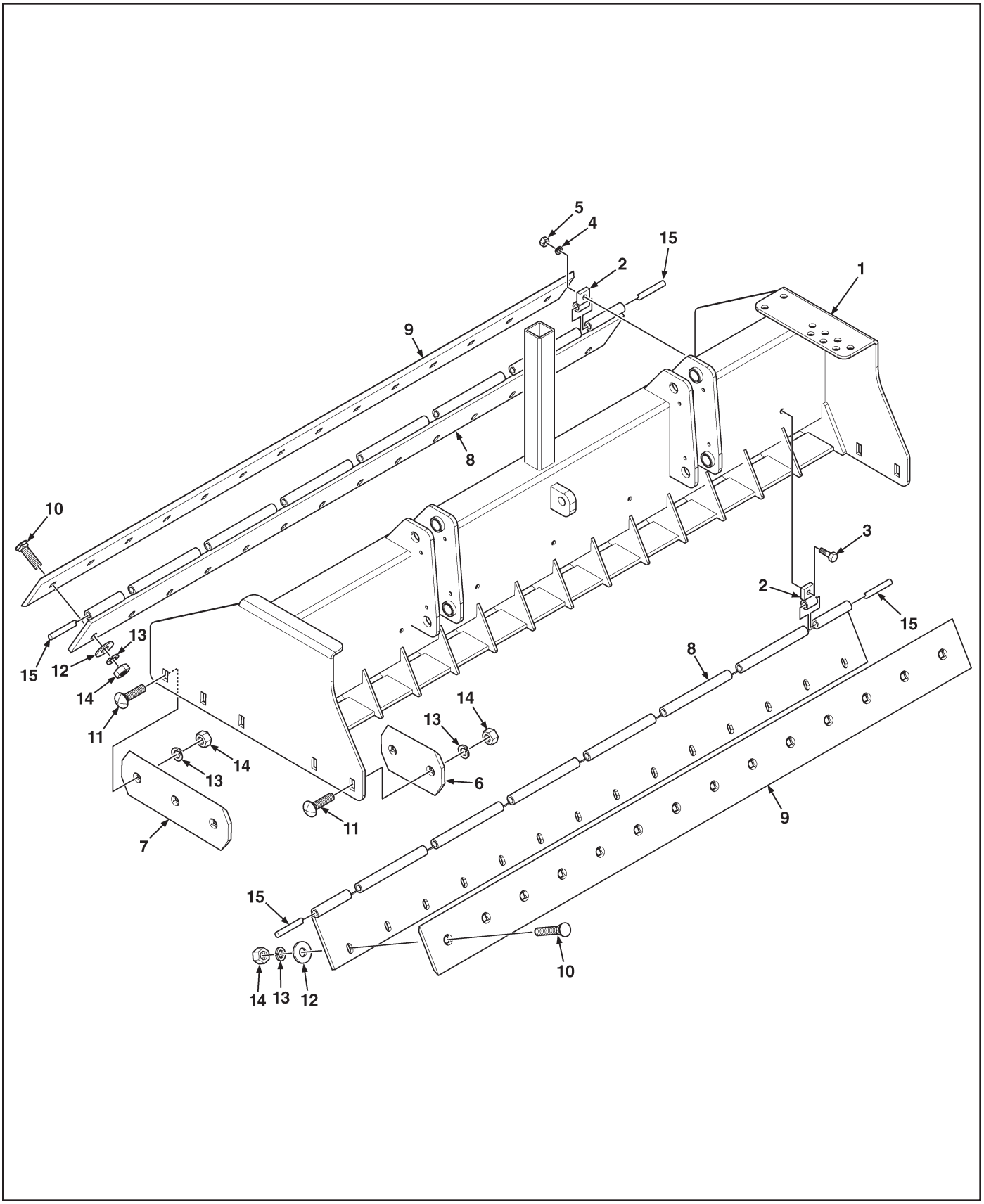

Para-Level Grading Box PARTS LIST

ATI Corporation
New Holland, PA 17557
Phone (717) 354-8721 • FAX (717) 354-2162
1-800-342-0905
www.level-best.com

Figure 1. Main Frame and Cutting Edges

Item	Part No.	Qty	Description
1	315-563-000	1	Frame, Main 6'
	315-564-000	1	Frame, Main 7'
	315-565-000	1	Frame, Main 8'
2	315-561-000	14	Hinge, Back Plate, 6' & 7'
	315-561-000	18	Hinge, Back Plate, 8'
3	LP	AR	Bolt, Hex Head, 1/2"-13UNC x 2" Long
4	LP	AR	Washer, Lock, 1/2"
5	LP	AR	Nut, Hex, 1/2"-13UNC
6	000-190-150	2	Edge, Cutting, End, DBF, 9-1/2" Long
7	000-190-149	2	Edge, Cutting, End, DBF, 16-3/4" Long
8	315-563-100	2	Mount Assembly, Blade 6'
	315-564-100	2	Mount Assembly, Blade 7'
	315-565-100	2	Mount Assembly, Blade 8'
9	000-190-075	2	Edge, Cutting, DBF, 72" Long
	000-190-077	2	Edge, Cutting, DBF, 84" Long
	000-190-079	2	Edge, Cutting, DBF, 96" Long
10	000-150-263	AR	Bolt, Plow, 5/8"-11UNC x 2" Long
11	000-150-253	AR	Bolt, Carriage, 5/8"-11UNC x 1-3/4" Long
12	LP	AR	Washer, Flat, 5/8"
13	000-155-077	AR	Washer, Lock, 5/8"
14	000-158-138	AR	Nut, Hex, 5/8"-11UNC
15	000-161-127	2	Pin, Hinge, 6'
	000-161-128	2	Pin, Hinge, 7'
	000-161-129	2	Pin, Hinge, 8'

AR - As Required NSS - Not Serviced Separately ASN - After Serial No. BSN - Before Serial No. LP - Local Purchase

ATI Corporation
New Holland, PA 17557
Phone (717) 354-8721 • FAX (717) 354-2162
1-800-342-0905
www.level-best.com

Para-Level Grading Box PARTS LIST

Figure 2. Attachment Frame and Related Parts

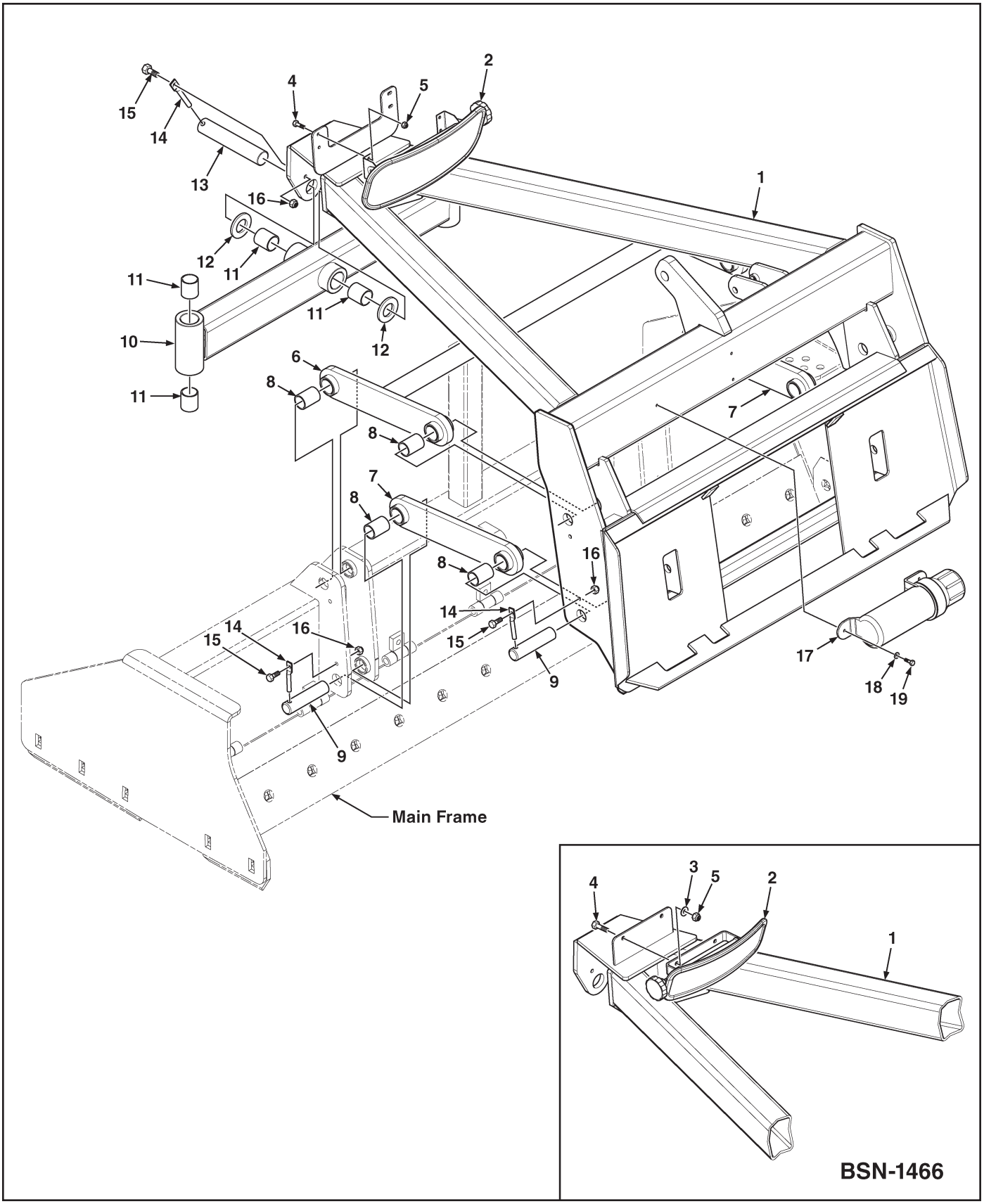

Para-Level Grading Box PARTS LIST

Figure 2. Attachment Frame and Related Parts

ATI Corporation
New Holland, PA 17557
Phone (717) 354-8721 • FAX (717) 354-2162
1-800-342-0905
www.level-best.com

Item	Part No.	Qty	Description
1	315-566-000	1	Frame Weldment, Attachment, ASN-1465
	315-566-000	1	Frame Weldment, Attachment, BSN-1466
2	001-001-097	1	Mirror, ASN-1465
	001-001-051	1	Mirror, BSN-1466
3	LP	2	Washer, Flat, 3/8", SAE, BSN-1466
4	LP	4	Bolt, Hex Head, 1/4"-20UNC x 3/4" Long, ASN-1465
	LP	2	Bolt, Hex Head, 3/8"-16UNC x 1" Long, BSN-1466
5	LP	4	Nut, Hex, Nylon Lock, 1/4"-20UNC, ASN-1465
	LP	2	Nut, Hex, Nylon Lock, 3/8"-16UNC, BSN-1466
6	315-572-000	1	Link, Lift, Torsion, Box, Includes Item 8
7	315-567-000	2	Link, Lift, Lower, Box, Includes Item 8
8	000-176-183	8	Bushing, Link, 1-1/2" OD x 1-1/4" ID x 2" Long
9	000-161-098	8	Pin, Link
10	315-568-000	1	Axle Assembly, Front, Includes Item 11
11	000-176-171	6	Bushing, Wheel Frame, 1-3/4" OD x 1-1/2" ID x 1-1/2" Long
12	000-155-002	2	Washer, Flat, 2-1/4" OD x 1-1/2" ID x 10 Gauge Thick
13	000-161-099	1	Shaft, Wheel Pivot
14	000-161-024	9	Pin, Retainer, 3/8" Dia. x 3-1/4" Long
15	LP	9	Bolt, Hex Head, 5/16"-18UNC x 1-1/4" Long
16	LP	9	Nut, Hex, Nylon Lock, 5/16"-18UNC
17	001-001-083	1	Canister, Operators Manual
18	LP	3	Washer, Flat, 1/4"
19	LP	3	Bolt, Hex Head, 1/4"-20UNC x 1" Long

AR - As Required NSS - Not Serviced Separately ASN - After Serial No. BSN - Before Serial No. LP - Local Purchase

ATI Corporation
New Holland, PA 17557
Phone (717) 354-8721 • FAX (717) 354-2162
1-800-342-0905
www.level-best.com

Para-Level Grading Box PARTS LIST

Figure 3. Caster Fork and Wheel

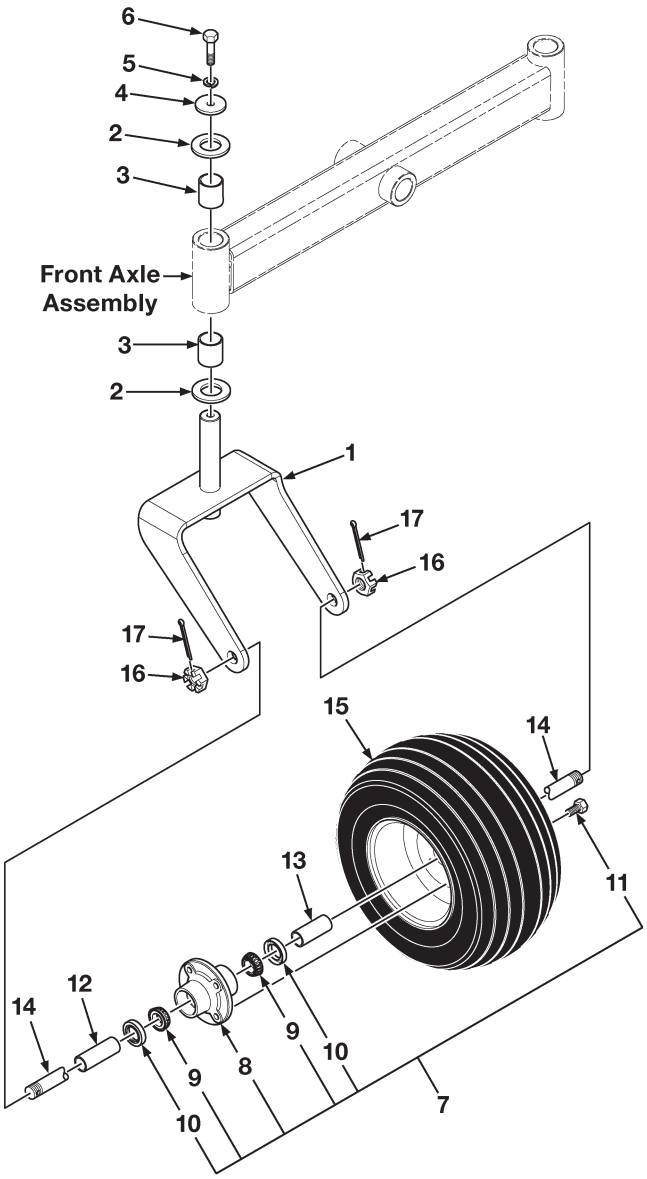

Para-Level Grading Box PARTS LIST

ATI Corporation
New Holland, PA 17557
Phone (717) 354-8721 • FAX (717) 354-2162
1-800-342-0905
www.level-best.com

Figure 3. Caster Fork and Wheel

Item	Part No.	Qty	Description
1	315-548-000	2	Fork, Caster
2	000-155-002	4	Washer, Flat, 2-1/4" OD x 1-1/2" ID x 10 Gauge Thick
3	000-176-171	4	Bushing, Wheel Frame, 1-3/4" OD x 1-1/2" ID x 1-1/2" Long
4	000-155-004	2	Washer, Flat, 2-1/4" OD x 17/32" ID x 1/4" Thick
5	LP	2	Washer, Lock, 1/2"
6	LP	2	Bolt, Hex Head, 1/2"-13UNC x 1-1/4" Long
7	001-001-069	2	Bearing Assembly, Includes Items 8 thru 12
8	001-001-074	1	Hub, Wheel, With Outer Race
9	000-176-184	2	Bearing, Roller, Tapered, 1" Dia. Bore
10	000-166-457	2	Seal, Grease, 2" OD x 1-1/4" ID
11	LP	4	Bolt, Hex Head, 1/2"-20UNF x 1" Long
12	315-598-000	2	Spacer, Wheel Bearing, Long
13	315-597-000	2	Spacer, Wheel Bearing, Short
14	315-553-000	2	Shaft, Axle, Wheel, Roller Bearing
15	001-001-057	2	Wheel/Tire, 18/8.50-12
16	000-158-193	4	Nut, Castle, 1"-14UNF
17	LP	4	Pin, Cotter, 1/8" Dia. x 1-1/4" Long

AR - As Required NSS - Not Serviced Separately ASN - After Serial No. BSN - Before Serial No. LP - Local Purchase

ATI Corporation
New Holland, PA 17557
Phone (717) 354-8721 • FAX (717) 354-2162
1-800-342-0905
www.level-best.com

Para-Level Grading Box PARTS LIST

Figure 4. Hydraulics Cylinder Only

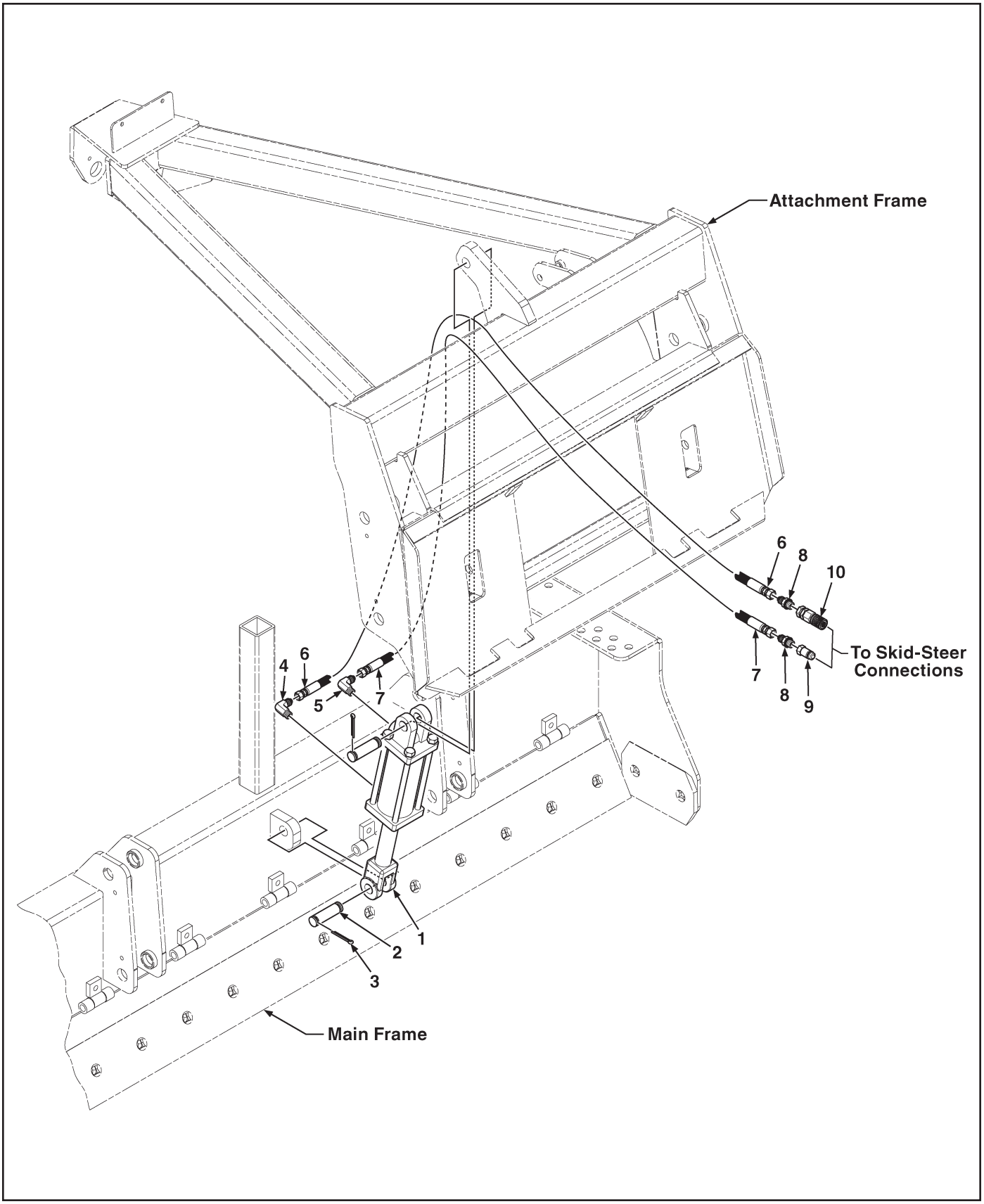

Para-Level Grading Box PARTS LIST

Figure 4. Hydraulics Cylinder Only

ATI Corporation
New Holland, PA 17557
Phone (717) 354-8721 • FAX (717) 354-2162
1-800-342-0905
www.level-best.com

Item	Part No.	Qty	Description
1	000-166-181	1	Cylinder, Hydraulic, 3" Bore x 6" Stroke, See Breakdown Figure 18, Includes Items 2 & 3
2	000-161-068	2	Pin, Cylinder, 1" Dia. x 3-3/8" Long
3	LP	4	Pin, Cotter, 3/16" Dia. x 1-3/4" Long
4	000-166-417	1	Elbow, 90°, 6MJ x 8MB
5	000-166-488	1	Elbow, 90°, 6MJ x 8MB, With Orifice
6	000-166-450	1	Hose, 1/2" Dia. x 70" Long x 6FJX x 8FJX, 3,000 PSI
7	000-166-450	1	Hose, 1/2" Dia. x 70" Long x 6FJX x 8FJX, 3,000 PSI
8	000-166-202	2	Adapter, Straight, 8MJ x 12MB
9	000-166-068	1	Coupler, Quick Disconnect, Flat Face, Male
10	000-166-069	1	Coupler, Quick Disconnect, Flat Face, Female
			BH-Bulkhead MP-Male Pipe FP-Female Pipe FPX-Female Pipe Swivel MB-Male O-Ring Boss FB-Female O-Ring Boss MJ-Male JIC FJ-Female JIC FJX-Female JIC Swivel

AR - As Required NSS - Not Serviced Separately ASN - After Serial No. BSN - Before Serial No. LP - Local Purchase

ATI Corporation
New Holland, PA 17557
Phone (717) 354-8721 • FAX (717) 354-2162
1-800-342-0905
www.level-best.com

Para-Level Grading Box PARTS LIST

Figure 5. Hydraulics With Optional Valve Assembly

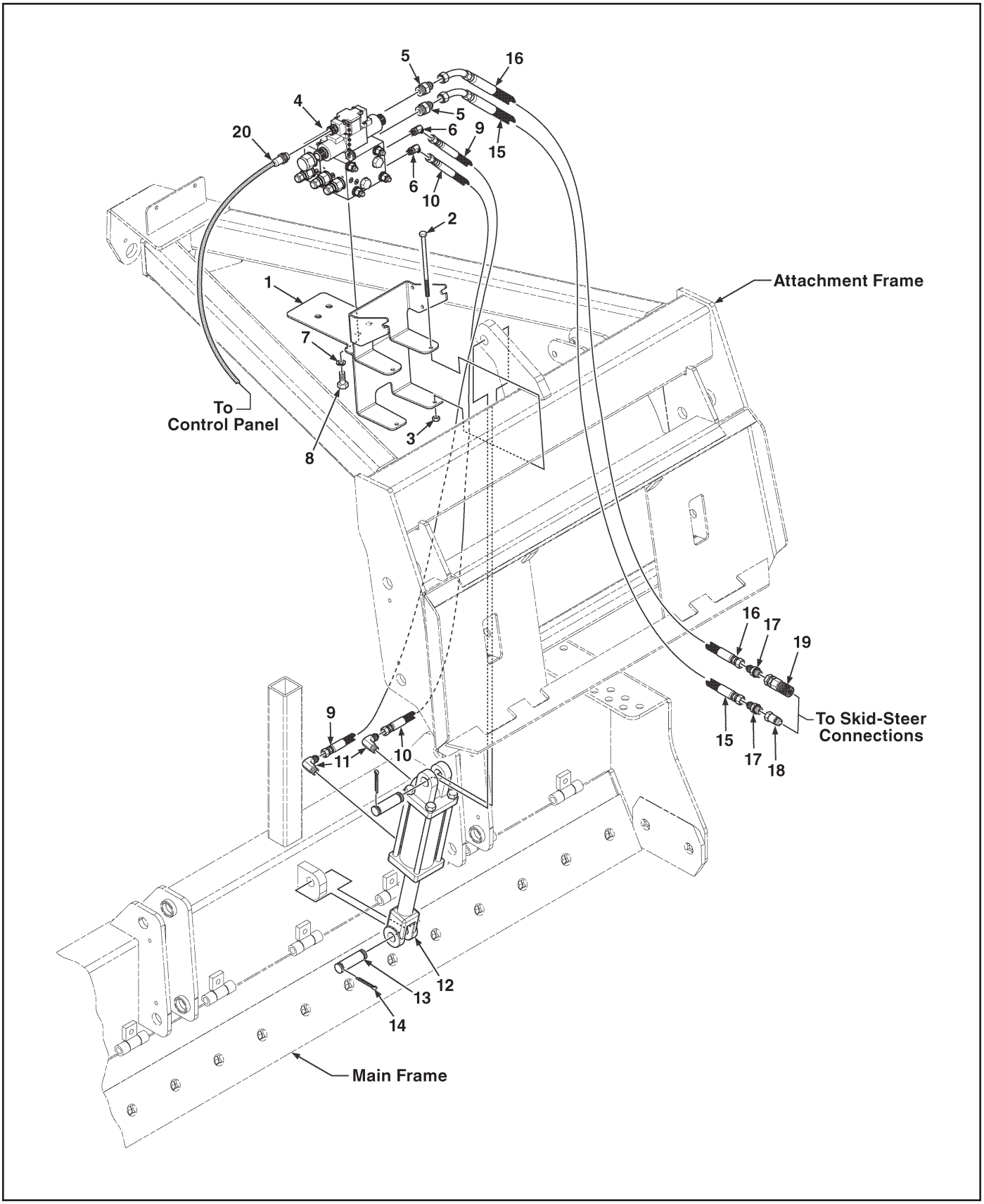

Para-Level Grading Box PARTS LIST

Figure 5. Hydraulics With Optional Valve Assembly

ATI Corporation
New Holland, PA 17557
Phone (717) 354-8721 • FAX (717) 354-2162
1-800-342-0905
www.level-best.com

Item	Part No.	Qty	Description
1	315-596-000	1	Bracket, Mounting, Manifold/Control Panel
2	LP	2	Bolt, Hex Head, 5/16"-18UNC x 7" Long
3	LP	4	Nut, Hex, Nylon Lock, 5/16"-18UNC
4	000-166-496	1	Valve Assembly, Hydraulic, Includes Items 5 & 6, See Breakdown Figure 6
5	000-166-401	2	Adapter, Straight, 8MJ x 10MB
6	000-166-175	2	Elbow, 45°, 6MJ x 6MB
7	LP	2	Washer, Lock, 1/2", SAE
8	LP	2	Bolt, Hex Head, 1/2"-11UNC x 1-1/4" Long
9	000-166-418	1	Hose, 3/8" Dia. x 28" Long x 6FJX x 6FJX, 3,000 PSI
10	000-166-418	1	Hose, 3/8" Dia. x 28" Long x 6FJX x 6FJX, 3,000 PSI
11	000-166-417	2	Elbow, 90°, 6MJ x 8MB
12	000-166-181	1	Cylinder, Hydraulic, 3" Bore x 6" Stroke, See Breakdown Figure 18, Includes Items 13 & 14
13	000-161-068	2	Pin, Cylinder, 1" Dia. x 3-3/8" Long
14	LP	4	Pin, Cotter, 3/16" Dia. x 1-3/4" Long
15	000-166-187	1	Hose, 1/2" Dia. x 58" Long x 8FJX x 8FJX45, 3,000 PSI
16	000-166-187	1	Hose, 1/2" Dia. x 58" Long x 8FJX x 8FJX45, 3,000 PSI
17	000-166-202	2	Adapter, Straight, 8MJ x 12MB
18	000-166-068	1	Coupler, Quick Disconnect, Flat Face, Male (Tank Line)
19	000-166-069	1	Coupler, Quick Disconnect, Flat Face, Female (Pressure Line)
20	000-200-152	1	Cable, Solenoid, 90° 3-Wire, Quick Disconnect, 3' Long, Apache CB26/Spectra CB25
	000-200-175	1	Cable, Solenoid, 90° 3-Wire, Quick Disconnect, 3' Long, Apache CB52/Spectra CB30
	000-200-171	1	Cable, Power/Remote/Solenoid, System Five & LS-B4, Topcon
	000-200-144	1	Cable, Solenoid, Quick Disconnect, 12' Long, MEI/Mikrofyn
			BH-Bulkhead
			MP-Male Pipe
			FP-Female Pipe
			FPX-Female Pipe Swivel
			MB-Male O-Ring Boss
			FB-Female O-Ring Boss
			MJ-Male JIC
			FJ-Female JIC
			FJX-Female JIC Swivel

AR - As Required NSS - Not Serviced Separately ASN - After Serial No. BSN - Before Serial No. LP - Local Purchase

ATI Corporation
New Holland, PA 17557
Phone (717) 354-8721 • FAX (717) 354-2162
1-800-342-0905
www.level-best.com

Para-Level Grading Box PARTS LIST

Figure 6. Hydraulic Valve Assembly

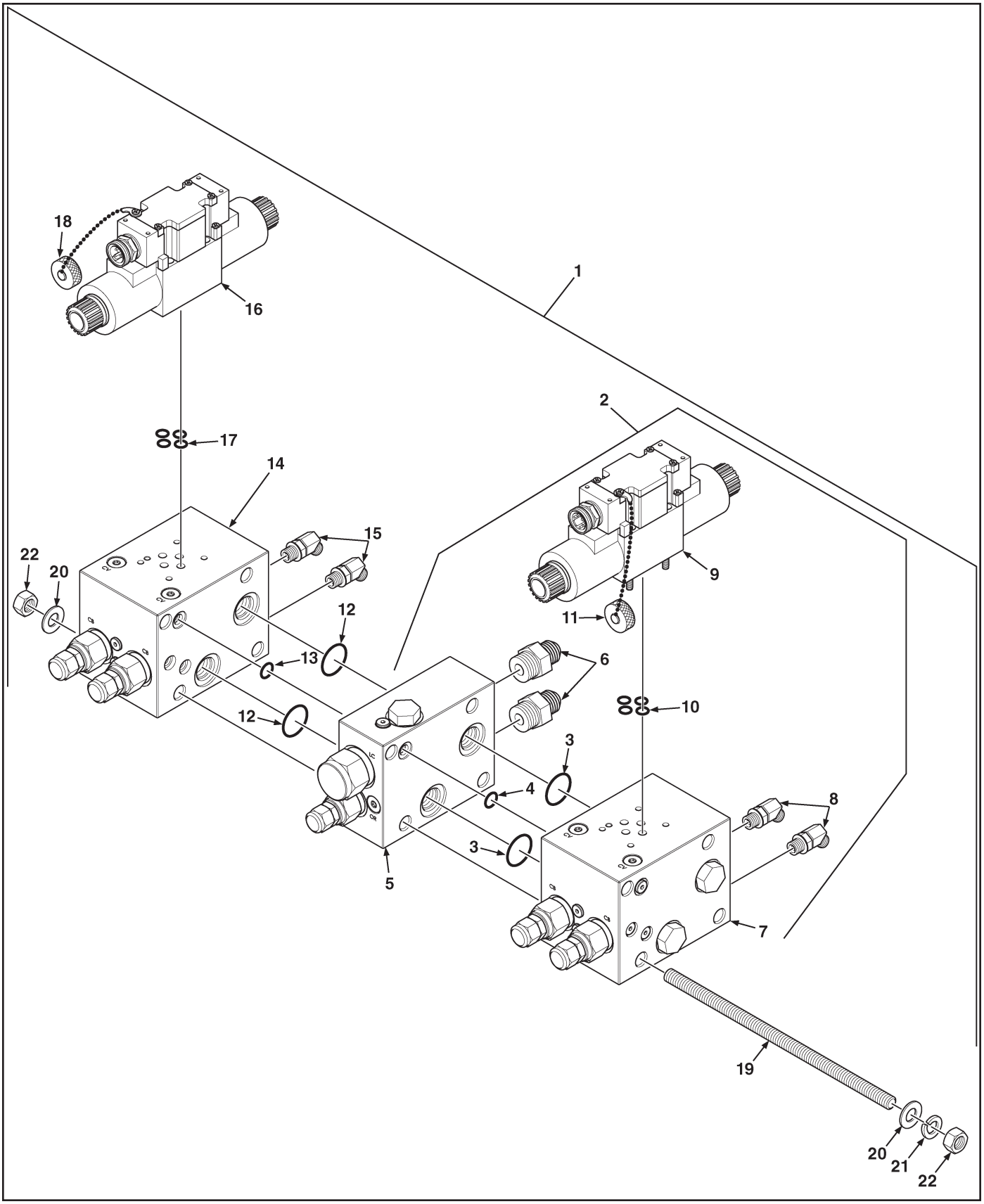

Para-Level Grading Box PARTS LIST

ATI Corporation
New Holland, PA 17557
Phone (717) 354-8721 • FAX (717) 354-2162
1-800-342-0905
www.level-best.com

Figure 6. Hydraulic Valve Assembly

Item	Part No.	Qty	Description
1	000-166-489	1	Valve Assembly, Hydraulic, Includes Items 2 thru 22
2	000-166-496	1	Valve Assembly, Base, Includes Items 3 thru 11
3	LP	2	O-Ring, Dash 120
4	LP	1	O-Ring, Dash 112
5	000-166-498	1	Manifold Block, Primary, Includes Item 6
6	000-166-401	2	Adapter, Straight, 8MJ x 10MB
7	000-166-500	1	Manifold Block, Secondary, Includes Item 8 thru 11
8	000-166-175	2	Elbow, 45°, 6MJ x 6MB
9	000-166-409	1	Valve, Directional, Includes Item 10
10	LP	4	O-Ring, Directional Valve
11	001-001-060	1	Cap, Quick Disconnect, with Chain
12	LP	2	O-Ring, Dash 120
13	LP	1	O-Ring, Dash 112
14	000-166-523	1	Manifold Block, Secondary, Slope, Includes Items 15 thru 18
15	000-166-175	2	Elbow, 45°, 6MJ x 6MB
16	000-166-521	1	Valve, Directional, Includes Item 17
17	LP	4	O-Ring, Directional Valve
18	001-001-060	1	Cap, Quick Disconnect, with Chain
19	LP	4	Rod, Threaded, 7/16"-20UNF x 6-5/8" Long (Base Valve Assembly)
	LP	4	Rod, Threaded, 7/16"-20UNF x 10-1/8" Long (With 1 Optional Secondary Valve)
	LP	4	Rod, Threaded, 7/16"-20UNF x 13-5/8" Long (With 2 Optional Secondary Valve)
20	LP	8	Washer, Flat, 7/16" SAE
21	LP	4	Washer, Lock, 7/16"
22	LP	8	Nut, Hex, 7/16"-20UNF

AR - As Required NSS - Not Serviced Separately ASN - After Serial No. BSN - Before Serial No. LP - Local Purchase

ATI Corporation
New Holland, PA 17557
Phone (717) 354-8721 • FAX (717) 354-2162
1-800-342-0905
www.level-best.com

Para-Level Grading Box PARTS LIST

Figure 7. Hydraulic Slope-Tach

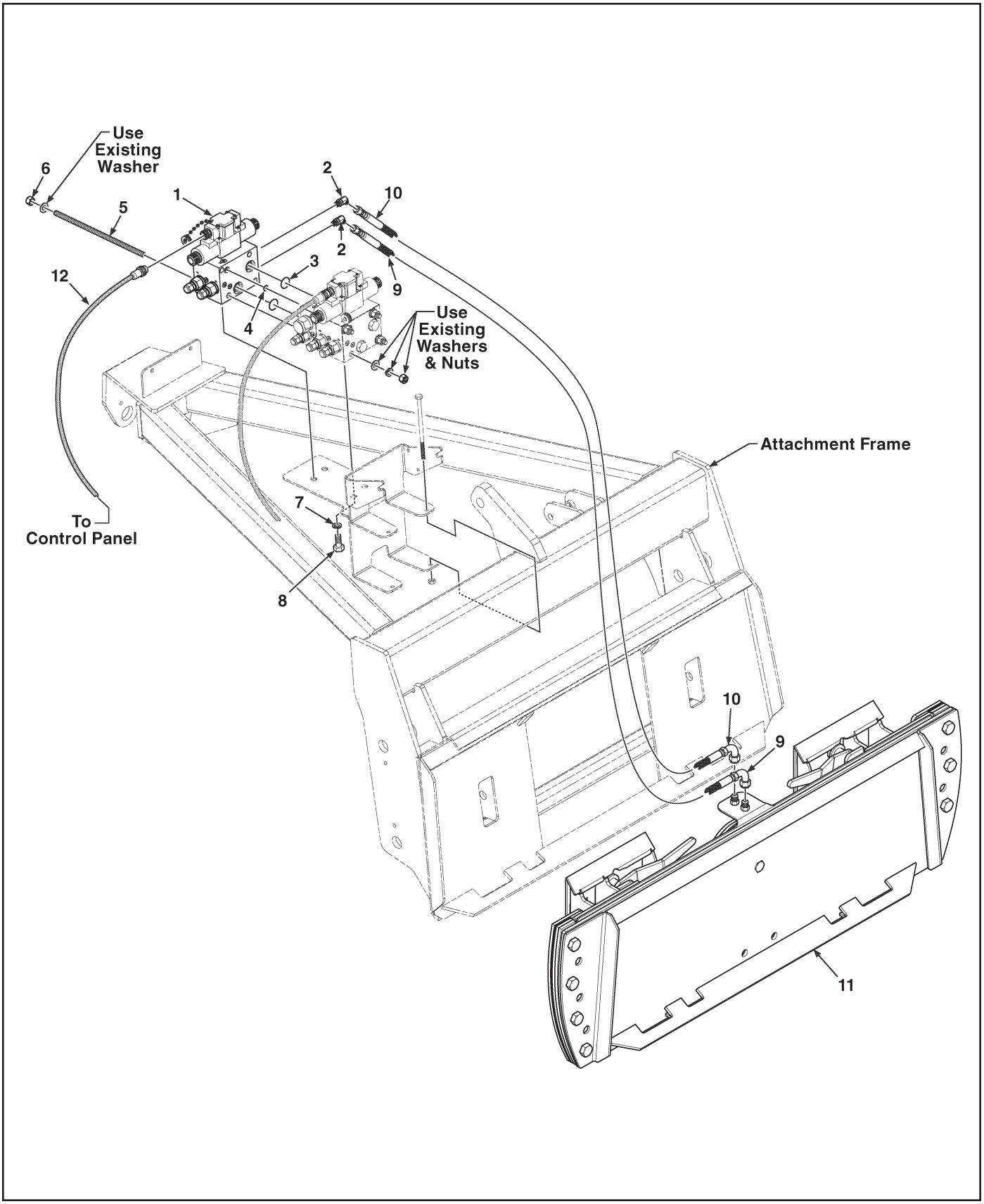

Para-Level Grading Box PARTS LIST

Figure 7. Hydraulic Slope-Tach

ATI Corporation
New Holland, PA 17557
Phone (717) 354-8721 • FAX (717) 354-2162
1-800-342-0905
www.level-best.com

Item	Part No.	Qty	Description
1	000-166-523	1	Manifold Block, Secondary, Slope, Includes Item 2, See Breakdown Figure 6
2	000-166-175	2	Elbow, 45°, 6MJ x 6MB
3	LP	2	O-Ring, Dash 120
4	LP	1	O-Ring, Dash 112
5	LP	4	Rod, Threaded, 7/16"-20UNF x 10-1/8" Long (Without Scarifier Assembly)
	LP	4	Rod, Threaded, 7/16"-20UNF x 13-5/8" Long (With Scarifier Assembly)
6	LP	4	Nut, Hex, 7/16"-20UNF
7	LP	4	Washer, Lock, 1/2", SAE
8	LP	4	Bolt, Hex Head, 1/2"-11UNC x 1-1/4" Long
9	000-166-422	1	Hose Assembly, 3/8" Dia. x 6FJX x 6FJX90 x 37" Long, 3000PSI
10	000-166-422	1	Hose Assembly, 3/8" Dia. x 6FJX x 6FJX90 x 37" Long, 3000PSI
11	100-192-000	1	Slope-Tach Assembly, See Breakdown Figures 8 & 9
12	000-200-152	1	Cable, Solenoid, 90°, 3-Wire, Quick Disconnect, 3' Long, Apache CB26
	000-200-175	1	Cable, Solenoid, 90°, 3-Wire, Quick Disconnect, 3' Long, Apache CB52
	000-200-171	1	Cable, Power/Remote/Solenoid, System Five & LS-B4, Topcon
	000-200-144	1	Cable, Solenoid, Quick Disconnect, 12' Long, MEI/Mikrofyn

AR - As Required NSS - Not Serviced Separately ASN - After Serial No. BSN - Before Serial No. LP - Local Purchase

ATI Corporation
New Holland, PA 17557
Phone (717) 354-8721 • FAX (717) 354-2162
1-800-342-0905
www.level-best.com

Para-Level Grading Box PARTS LIST

Figure 8. Slope-Tach QA-ST2 Assembly

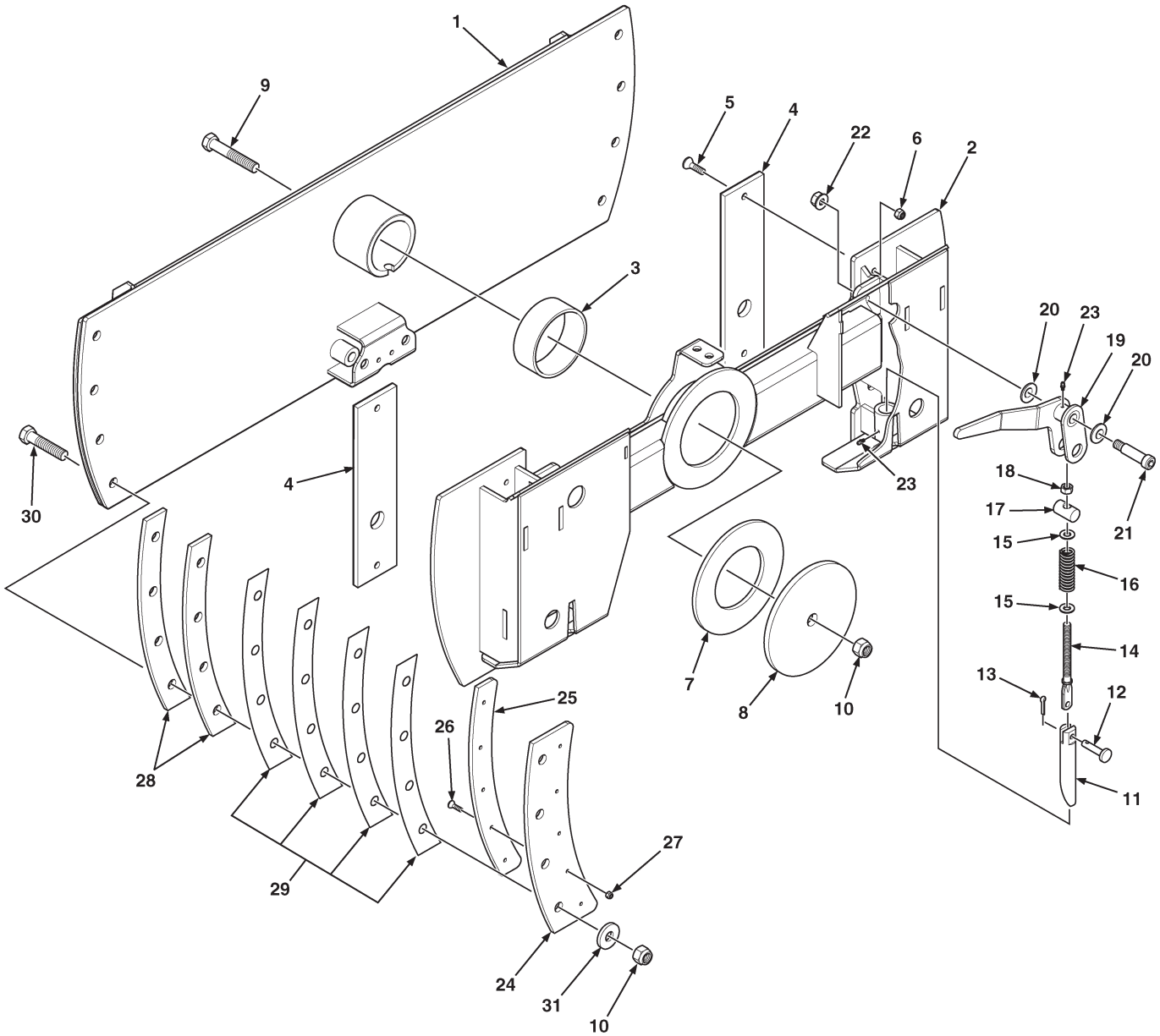

Para-Level Grading Box PARTS LIST

Level Best
LASER GRADING BOX
ATI Corporation
New Holland, PA 17557
Phone (717) 354-8721 • FAX (717) 354-2162
1-800-342-0905
www.level-best.com

Figure 8. Slope-Tach QA-ST2 Assembly

Item	Part No.	Qty	Description
1	100-192-200	1	Frame Weldment, Attachment
2	100-192-100	1	Frame Weldment, Tilt, Includes Item 3
3	000-176-260	1	Bushing, Nylon, 5-1/2" OD x 5" ID x 2" Long
4	100-094-007	2	Pad, Main Slide
5	LP	4	Screw, Flat Head, Slot, 3/8"-16UNC x 1-1/4" Long
6	LP	4	Nut, Hex, Nylon Lock, 3/8"-16UNC
7	100-192-008	1	Disk, Slide
8	100-192-001	1	Cap Weldment, Pivot
9	LP	1	Bolt, Hex Head, 3/4"-16UNF x 5" Long
10	000-158-182	9	Nut, Hex, Nylon Lock, 3/4"-16UNF
11	000-161-043	2	Pin, Latch, Round
12	000-161-015	2	Pin, Clevis, 3/8" Dia. x 1-1/4" Long
13	LP	2	Pin, Cotter, 5/32" Dia. x 1" Long
14	000-161-061	2	Pin, Spring (Connecting Rod)
15	000-155-056	4	Washer, Flat, 1/2" SAE
16	000-161-013	2	Spring, Compression
17	000-161-044	2	Pin, Pivot, 1" Dia. x 1-3/4" Long
18	LP	2	Nut, Hex, Nylon Lock, 1/2"-13UNC
19	100-094-350	1	Handle, Latch, Pin, Left (Shown)
	100-094-300	1	Handle, Latch, Pin, Right (Not Shown)
20	000-161-014	4	Spring, Belleville Disc
21	000-150-326	2	Bolt, Socket Head, 3/4" Dia. x 2-1/4" Shoulder, 5/8"-11UNC
22	000-158-141	2	Nut, Hex, Flange, 5/8"-11UNC
23	000-166-002	AR	Fitting, Lube, 3/16" Drive
24	100-094-001	2	Plate, Slide Retainer
25	100-094-005	1	Pad, Slide, Right (Shown)
	100-094-004	1	Pad, Slide, Left (Not Shown)
26	LP	10	Screw, Flat Head, Socket, 1/4"-20UNC x 1" Long
27	LP	10	Nut, Hex, Nylon Lock, 1/4"-20UNC
28	100-094-002	6	Shim, Retainer, 3/8"
29	100-094-003	AR	Shim, Retainer, 1/16"
30	LP	8	Bolt, Hex Head, 3/4"-16UNF x 3-1/2" Long
31	000-155-094	8	Washer, Slide Support

AR - As Required NSS - Not Serviced Separately ASN - After Serial No. BSN - Before Serial No. LP - Local Purchase

ATI Corporation
New Holland, PA 17557
Phone (717) 354-8721 • FAX (717) 354-2162
1-800-342-0905
www.level-best.com

Para-Level Grading Box PARTS LIST

Figure 9. Slope-Tach QA-ST1 Assembly

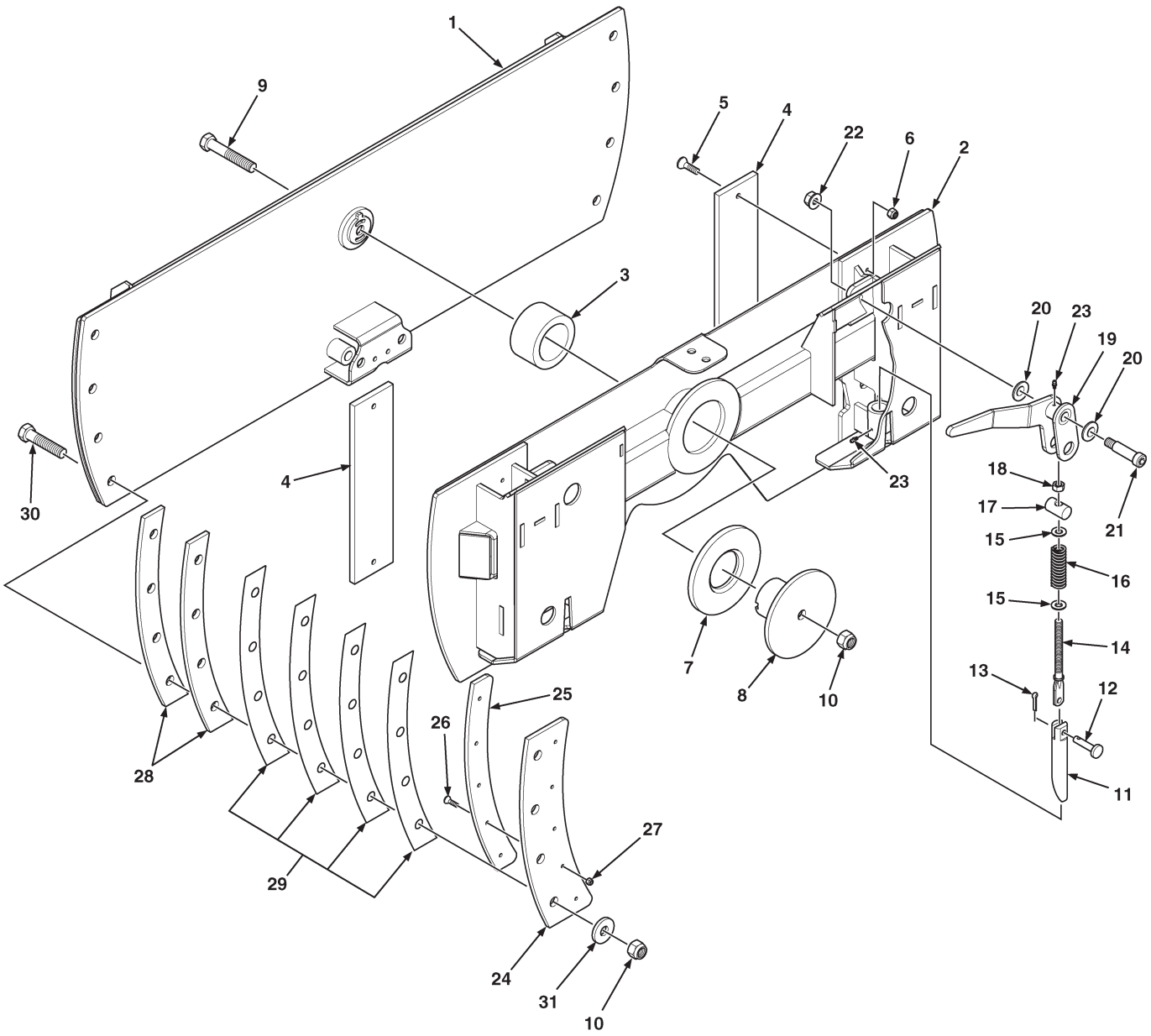

Para-Level Grading Box PARTS LIST

Figure 9. Slope-Tach QA-ST1 Assembly

ATI Corporation
New Holland, PA 17557
Phone (717) 354-8721 • FAX (717) 354-2162
1-800-342-0905
www.level-best.com

Item	Part No.	Qty	Description
1	100-094-200	1	Frame Weldment, Attachment
2	100-094-100	1	Frame Weldment, Tilt, Includes Item 3
3	000-176-024	1	Bushing, Nylon, 3-1/2" OD x 3" ID x 2" Long
4	100-094-007	2	Pad, Main Slide
5	LP	4	Screw, Flat Head, Slot, 3/8"-16UNC x 1-1/4" Long
6	LP	4	Nut, Hex, Nylon Lock, 3/8"-16UNC
7	100-094-006	1	Disk, Slide
8	100-094-400	1	Pin, Weldment, Pivot
9	LP	1	Bolt, Hex Head, 3/4"-16UNF x 5" Long
10	000-158-182	9	Nut, Hex, Nylon Lock, 3/4"-16UNF
11	000-161-043	2	Pin, Latch, Round
12	000-161-015	2	Pin, Clevis, 3/8" Dia. x 1-1/4" Long
13	LP	2	Pin, Cotter, 5/32" Dia. x 1" Long
14	000-161-061	2	Pin, Spring (Connecting Rod)
15	000-155-056	4	Washer, Flat, 1/2" SAE
16	000-161-013	2	Spring, Compression
17	000-161-044	2	Pin, Pivot, 1" Dia. x 1-3/4" Long
18	LP	2	Nut, Hex, Nylon Lock, 1/2"-13UNC
19	100-094-350	1	Handle, Latch, Pin, Left (Shown)
	100-094-300	1	Handle, Latch, Pin, Right (Not Shown)
20	000-161-014	4	Spring, Belleville Disc
21	000-150-326	2	Bolt, Socket Head, 3/4" Dia. x 2-1/4" Shoulder, 5/8"-11UNC
22	000-158-141	2	Nut, Hex, Flange, 5/8"-11UNC
23	000-166-002	AR	Fitting, Lube, 3/16" Drive
24	100-094-001	2	Plate, Slide Retainer
25	100-094-005	1	Pad, Slide, Right (Shown)
	100-094-004	1	Pad, Slide, Left (Not Shown)
26	LP	10	Screw, Flat Head, Socket, 1/4"-20UNC x 1" Long
27	LP	10	Nut, Hex, Nylon Lock, 1/4"-20UNC
28	100-094-002	6	Shim, Retainer, 3/8"
29	100-094-003	AR	Shim, Retainer, 1/16"
30	LP	8	Bolt, Hex Head, 3/4"-16UNF x 3-1/2" Long
31	000-155-094	8	Washer, Slide Support

AR - As Required NSS - Not Serviced Separately ASN - After Serial No. BSN - Before Serial No. LP - Local Purchase

ATI Corporation
New Holland, PA 17557
Phone (717) 354-8721 • FAX (717) 354-2162
1-800-342-0905
www.level-best.com

Para-Level Grading Box PARTS LIST

Figure 10. Slope-Tach Hydraulics and Related Parts

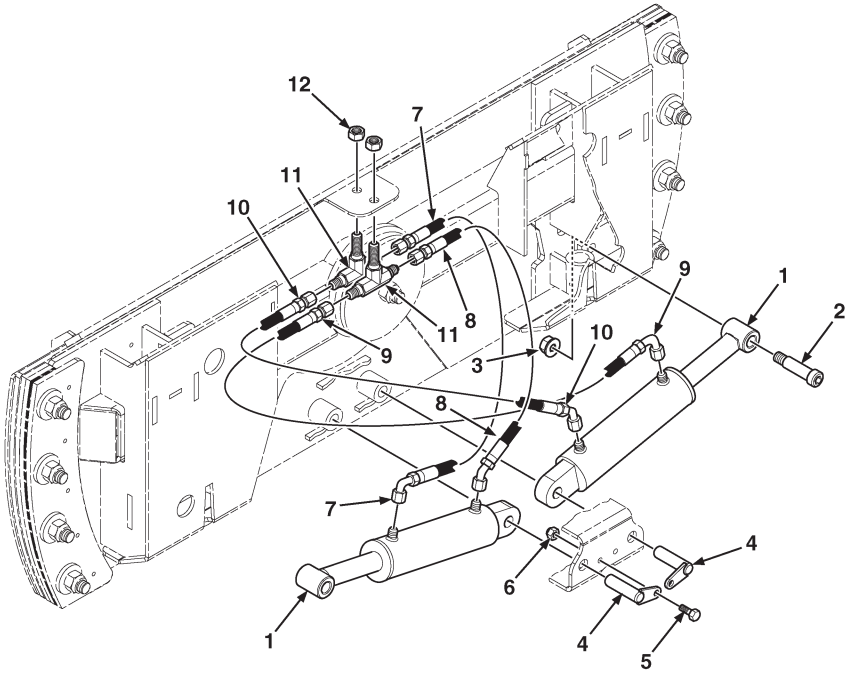

Para-Level Grading Box PARTS LIST

Figure 10. Slope-Tach Hydraulics and Related Parts

ATI Corporation
New Holland, PA 17557
Phone (717) 354-8721 • FAX (717) 354-2162
1-800-342-0905
www.level-best.com

Item	Part No.	Qty	Description
1	000-166-465	2	Cylinder Assembly, 2-1/4" Bore x 6" Stroke, See Breakdown Figure 19
2	000-150-326	2	Bolt, Socket Head, 3/4" Dia. x 2-1/4" Shoulder, 5/8"-11UNC
3	000-158-141	2	Nut, Hex, Flange, 5/8"-11UNC
4	000-161-027	2	Pin, Cylinder, 3/4" Dia. x 2-3/4" Long
5	LP	2	Bolt, Hex Head, 5/16"-18UNC x 1" Long
6	LP	2	Nut, Hex, Nylon Lock, 5/16"-18UNC
7	000-166-422	1	Hose Assembly, 3/8" Dia. x 6FJX x 6FJX90 x 37" Long, 3000 PSI
8	000-166-421	1	Hose Assembly, 3/8" Dia. x 6FJX x 6FJX45 x 30" Long, 3000 PSI
9	000-166-422	1	Hose Assembly, 3/8" Dia. x 6FJX x 6FJX90 x 37" Long, 3000 PSI
10	000-166-421	1	Hose Assembly, 3/8" Dia. x 6FJX x 6FJX45 x 30" Long, 3000 PSI
11	000-166-102	2	Fitting, Tee, Bulkhead, 6MJ x 6MJ x 6BH, Includes Item 12
12	NSS	2	Nut, Hex, Lock
			BH-Bulkhead
			MP-Male Pipe
			FP-Female Pipe
			FPX-Female Pipe Swivel
			MB-Male O-Ring Boss
			FB-Female O-Ring Boss
			MJ-Male JIC
			FJ-Female JIC
			FJX-Female JIC Swivel

AR - As Required NSS - Not Serviced Separately ASN - After Serial No. BSN - Before Serial No. LP - Local Purchase

ATI Corporation
New Holland, PA 17557
Phone (717) 354-8721 • FAX (717) 354-2162
1-800-342-0905
www.level-best.com

Para-Level Grading Box PARTS LIST

Figure 11. Laser Controls - Apache CB52/Spectra CB30

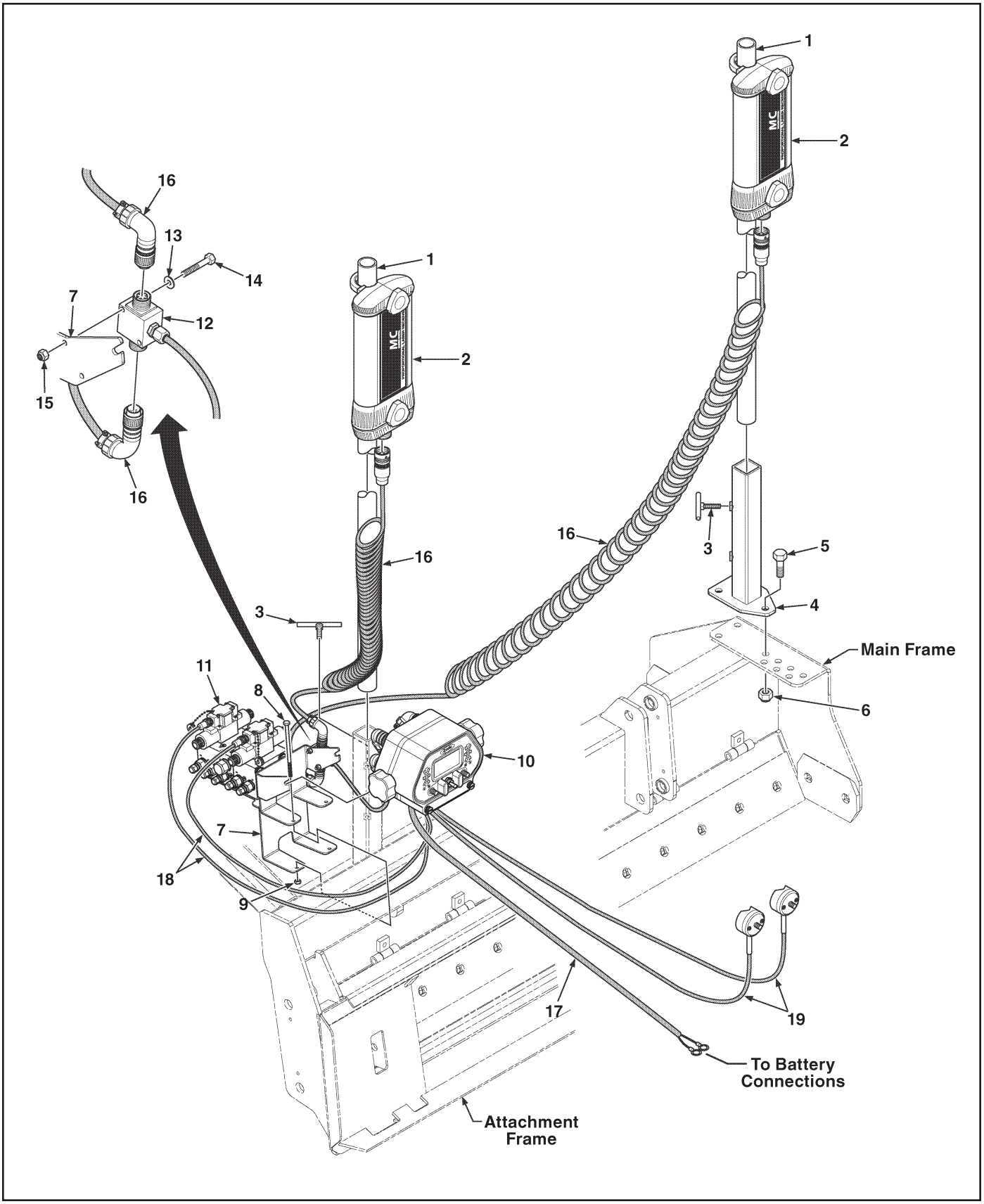

Para-Level Grading Box PARTS LIST

Figure 11. Laser Controls - Apache CB52/Spectra CB30

ATI Corporation
New Holland, PA 17557
Phone (717) 354-8721 • FAX (717) 354-2162
1-800-342-0905
www.level-best.com

Item	Part No.	Qty	Description
1	001-001-052	2	Pole, Mast
2	000-200-093	2	Receiver, Apache Bullseye 5MC
	000-200-215	2	Receiver, Spectra MC50
3	001-001-053	4	Handle, Tee
4	315-594-000	1	Mount, Mast Pole
5	LP	3	Bolt, Hex Head, 3/4"-16UNF x 1-3/4" Long
6	LP	3	Nut, Hex, Nylon Lock, 3/4"-16UNF
7	315-596-000	1	Bracket, Mounting, Manifold/Control Panel
8	LP	2	Bolt, Hex Head, 5/16"-18UNC x 7" Long
9	LP	2	Nut, Hex, Nylon Lock, 5/16"-18UNC
10	000-200-176	1	Panel, Control, Apache CB52, See Breakdown Figure 13
	000-200-213	1	Panel, Control, Spectra CB30, See Breakdown Figure 13
11	000-166-489	1	Hydraulic Valve Assembly, See Breakdown Figure 6
12	000-200-185	1	Block, Junction, With Dual Receiver Cable
13	LP	2	Washer, Flat, 1/4"
14	LP	2	Bolt, Hex Head, 1/4"-20UNC x 1-3/4" Long
15	LP	2	Nut, Hex, Nylon Lock, 1/4"-20UNC
16	000-200-187	2	Cable, Receiver, Coiled, 16' Long
17	000-200-097	1	Cable, Power, 2-Wire, 20' Long
18	000-200-175	1	Cable, Solenoid, Dual, 90°, 3-Wire, Quick Disconnect, 3' Long
19	000-200-186	1	Switch, Auxiliary, Remote, Dual, Auto/Manual, Raise/Lower, 10' Long

AR - As Required NSS - Not Serviced Separately ASN - After Serial No. BSN - Before Serial No. LP - Local Purchase

ATI Corporation
New Holland, PA 17557
Phone (717) 354-8721 • FAX (717) 354-2162
1-800-342-0905
www.level-best.com

Para-Level Grading Box PARTS LIST

Figure 12. Laser Controls - Apache CB26/Spectra CB25

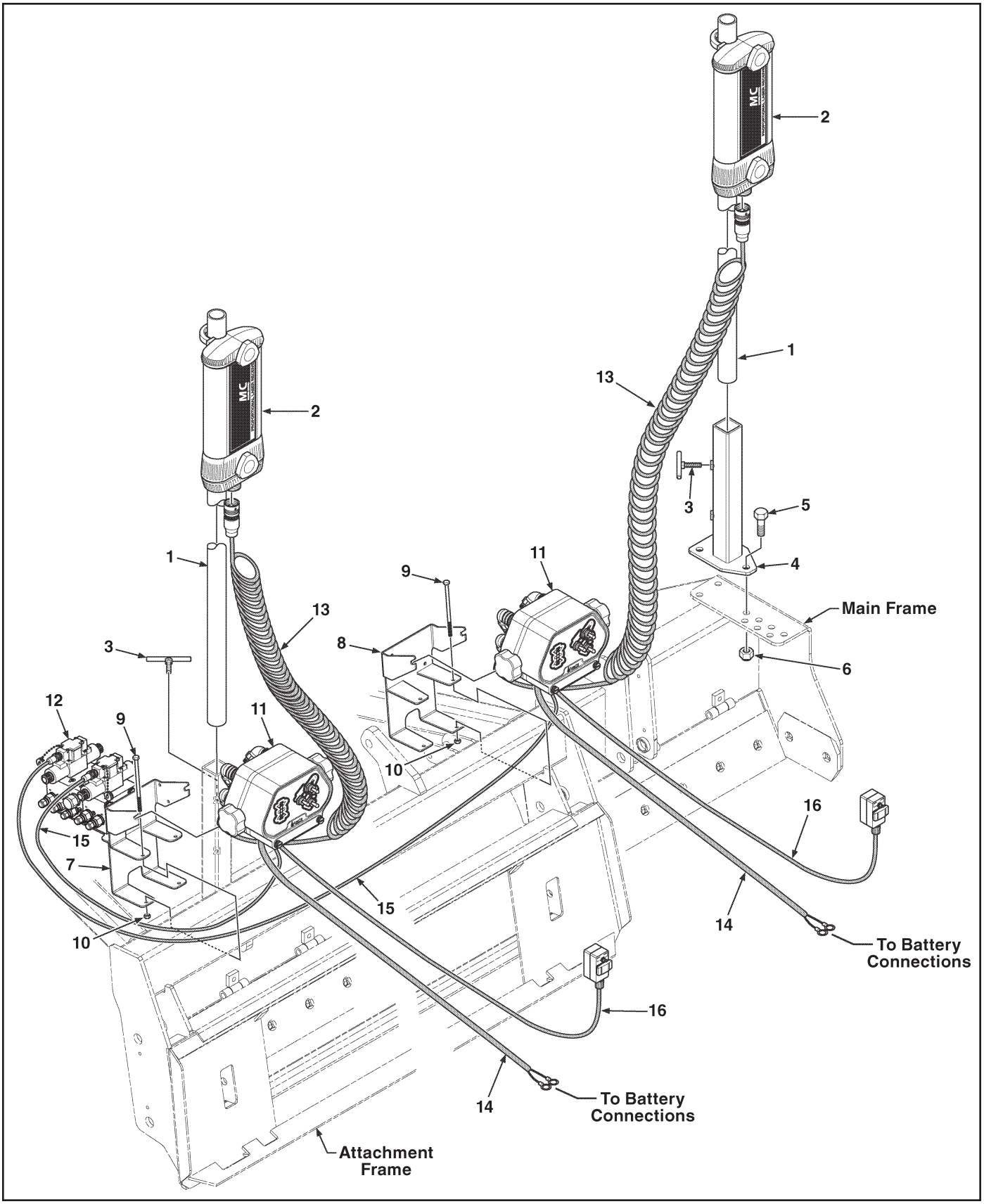

Para-Level Grading Box PARTS LIST

Figure 12. Laser Controls - Apache CB26/Spectra CB25

ATI Corporation
New Holland, PA 17557
Phone (717) 354-8721 • FAX (717) 354-2162
1-800-342-0905
www.level-best.com

Item	Part No.	Qty	Description
1	001-001-052	2	Pole, Mast
2	000-200-093	2	Receiver, Apache Bullseye 5MC
	000-200-215	2	Receiver, Spectra MC50
3	001-001-053	4	Handle, Tee
4	315-594-000	1	Mount, Mast Pole
5	LP	3	Bolt, Hex Head, 3/4"-16UNF x 1-3/4" Long
6	LP	3	Nut, Hex, Nylon Lock, 3/4"-16UNF
7	315-596-000	1	Bracket, Mounting, Manifold/Control Panel
8	315-574-000	1	Bracket, Mounting, Manifold/Control Panel, Single
9	LP	4	Bolt, Hex Head, 5/16"-18UNC x 7" Long
10	LP	4	Nut, Hex, Nylon Lock, 5/16"-18UNC
11	000-200-092	2	Panel, Control, Apache CB26, See Breakdown Figure 14
	000-200-211	2	Panel, Control, Apache CB25, See Breakdown Figure 14
12	000-166-489	1	Hydraulic Valve Assembly, See Breakdown Figure 6
13	000-200-099	2	Cable, Receiver, Coiled, 15' Long
14	000-200-097	2	Cable, Power, 2-Wire, 20' Long
15	000-200-152	2	Cable, Solenoid, 90°, 3-Wire, Quick Disconnect, 3' Long
16	000-200-158	2	Switch, Auxiliary, Remote, Auto/Manual, Raise/Lower

AR - As Required NSS - Not Serviced Separately ASN - After Serial No. BSN - Before Serial No. LP - Local Purchase

ATI Corporation
New Holland, PA 17557
Phone (717) 354-8721 • FAX (717) 354-2162
1-800-342-0905
www.level-best.com

Para-Level Grading Box PARTS LIST

Figure 13. Control Panel - Apache CB52/Spectra CB30

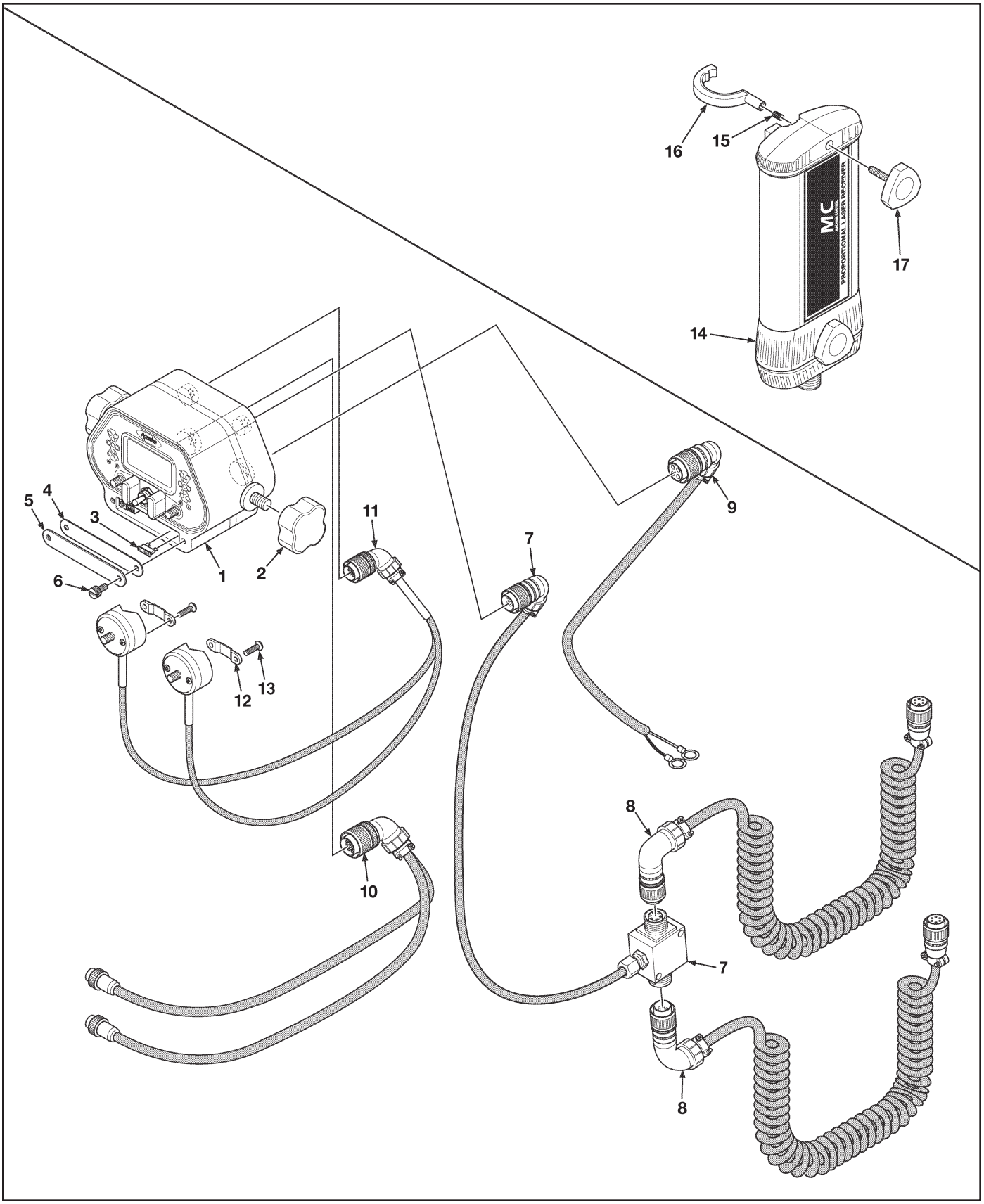

Para-Level Grading Box PARTS LIST

Figure 13. Control Panel - Apache CB52/Spectra CB30

ATI Corporation
New Holland, PA 17557
Phone (717) 354-8721 • FAX (717) 354-2162
1-800-342-0905
www.level-best.com

Item	Part No.	Qty	Description
1	000-200-176	1	Panel, Control, Apache CB52, Includes Items 2 thru 6
	000-200-213	1	Panel, Control, Spectra CB30, Includes Items 2 thru 6
2	000-200-112	2	Knob
3	LP	1	Fuse, 25 Amp
4	000-200-115	1	Gasket, Front Cover Plate
5	000-200-114	1	Plate, Front Cover
6	000-200-113	2	Screw, Thumb
7	000-200-185	1	Block, Junction, With Dual Receiver Cable
8	000-200-187	2	Cable, Receiver, Coiled, 16' Long
9	000-200-097	1	Cable, Power, 2-Wire, 20' Long
10	000-200-175	1	Cable, Solenoid, 90°, 3-Wire, Quick Disconnect, 3' Long
11	000-200-186	1	Switch, Auxiliary, Remote, Dual, Auto/Manual, Raise/Lower, 10' Long, Includes Items 13 & 14
12	NSS	1	Clamp
13	NSS	2	Screw
14	000-200-093	1	Receiver, Apache Bullseye 5MC, Includes Items 15 thru 17
	000-200-215	1	Receiver, Spectra MC50, Includes Items 15 thru 17
15	000-161-094	2	Spring, Clamp, Compression
16	000-200-108	2	Clamp, Universal, 2" Dia.
17	000-200-107	2	Knob, Clamp

AR - As Required NSS - Not Serviced Separately ASN - After Serial No. BSN - Before Serial No. LP - Local Purchase

ATI Corporation
New Holland, PA 17557
Phone (717) 354-8721 • FAX (717) 354-2162
1-800-342-0905
www.level-best.com

Para-Level Grading Box PARTS LIST

Figure 14. Control Panel - Apache CB26/Spectra CB25

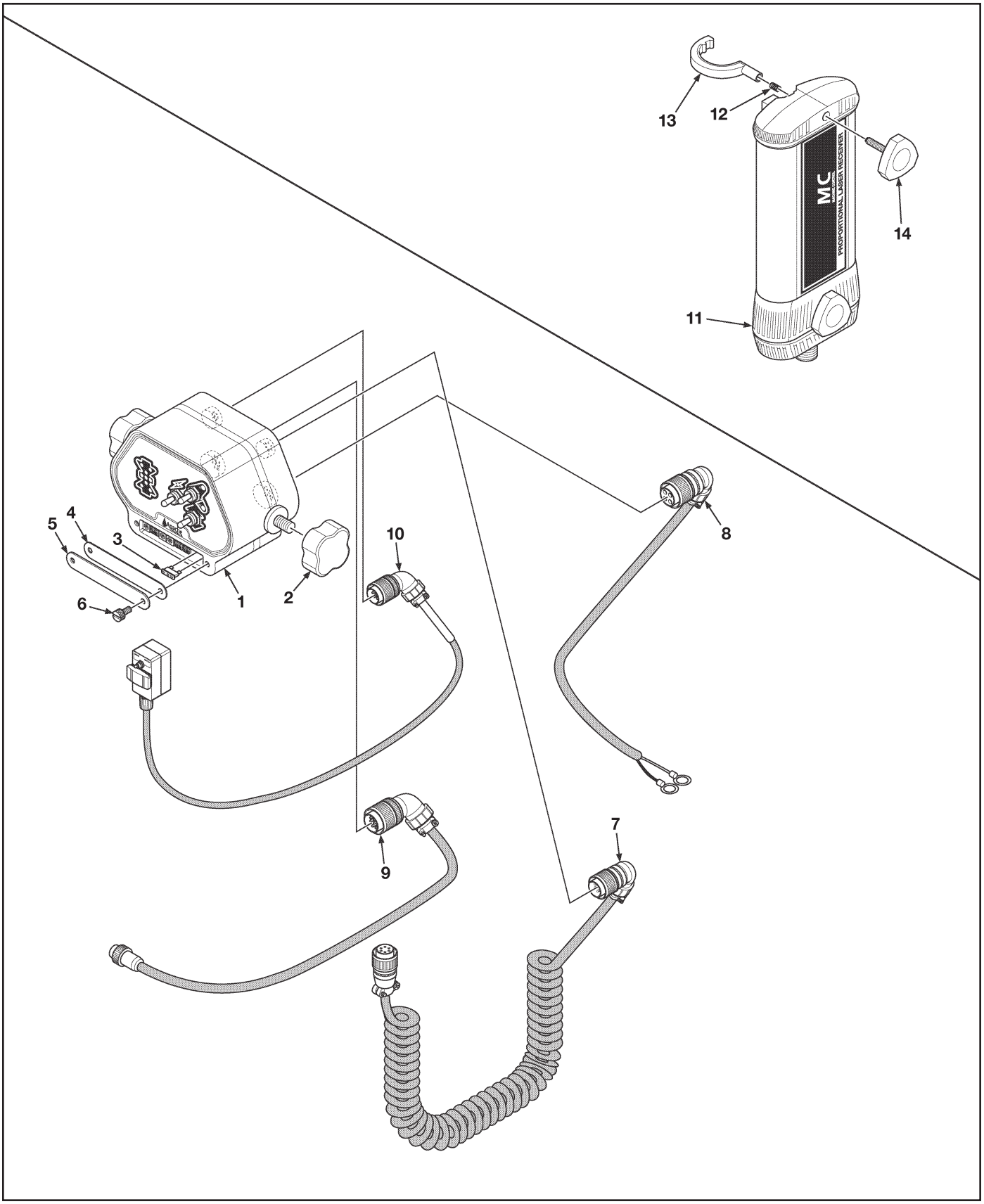

Para-Level Grading Box PARTS LIST

Figure 14. Control Panel - Apache CB26/Spectra CB25

ATI Corporation
New Holland, PA 17557
Phone (717) 354-8721 • FAX (717) 354-2162
1-800-342-0905
www.level-best.com

Item	Part No.	Qty	Description
1	000-200-092	1	Panel, Control, Apache CB26, Includes Items 2 thru 6
	000-200-211	1	Panel, Control, Spectra CB25, Includes Items 2 thru 6
2	000-200-112	2	Knob
3	LP	1	Fuse, 25 Amp
4	000-200-115	1	Gasket, Front Cover Plate
5	000-200-114	1	Plate, Front Cover
6	000-200-113	2	Screw, Thumb
7	000-200-099	1	Cable, Receiver, Coiled, 15' Long
8	000-200-097	1	Cable, Power, 2-Wire, 20' Long
9	000-200-152	1	Cable, Solenoid, 90°, 3-Wire, Quick Disconnect, 3' Long
10	000-200-158	1	Switch Assembly, Remote, Auto/Manual, Raise/Lower
11	000-200-093	1	Receiver, Apache Bullseye 5MC, Includes Items 12 thru 14
	000-200-215	1	Receiver, Spectra MC50, Includes Items 12 thru 14
12	000-161-094	2	Spring, Clamp, Compression
13	000-200-108	2	Clamp, Universal, 2" Dia.
14	000-200-107	2	Knob, Clamp

AR - As Required NSS - Not Serviced Separately ASN - After Serial No. BSN - Before Serial No. LP - Local Purchase

ATI Corporation
New Holland, PA 17557
Phone (717) 354-8721 • FAX (717) 354-2162
1-800-342-0905
www.level-best.com

Para-Level Grading Box PARTS LIST

Figure 15. Laser Controls - Topcon

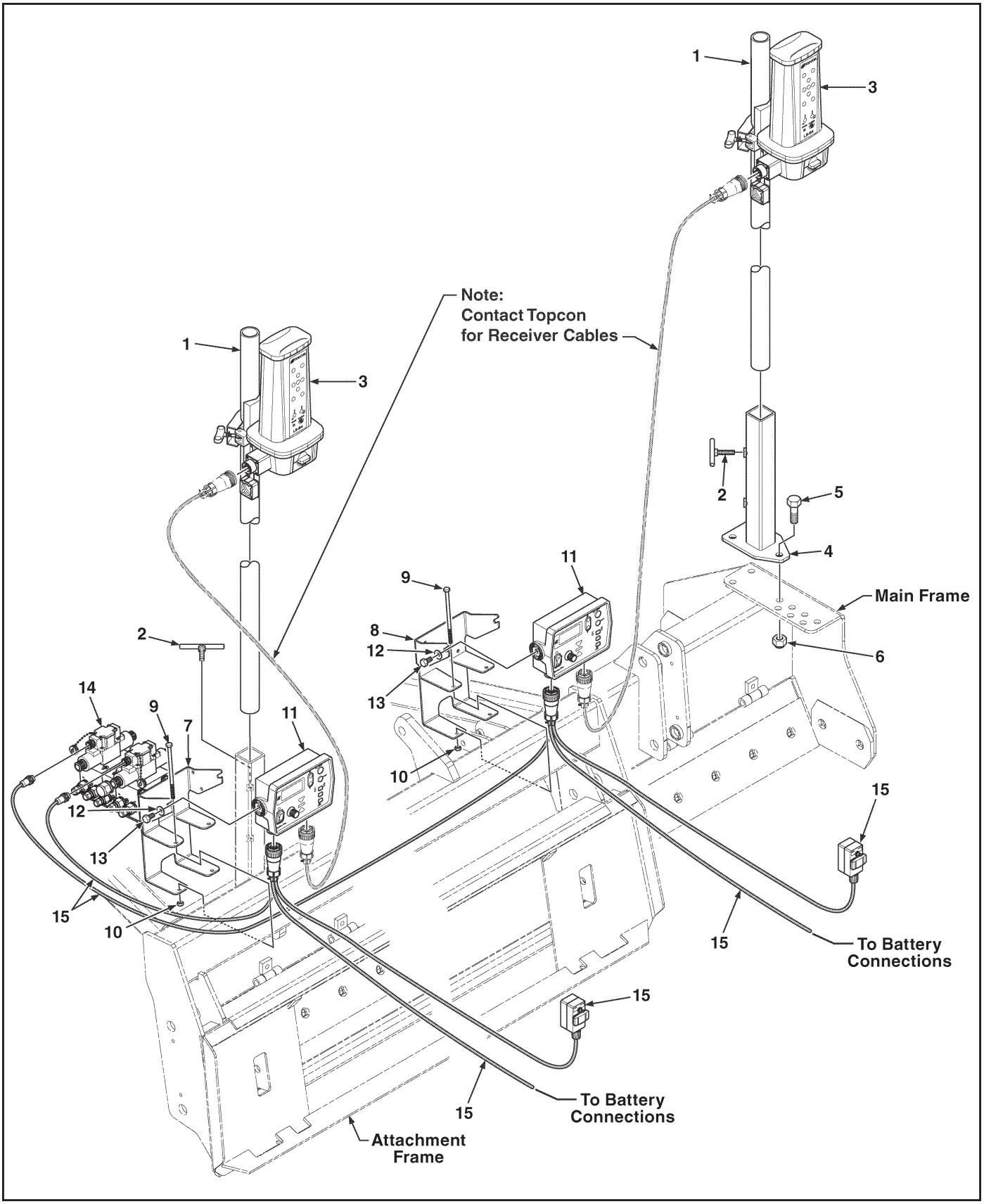

Para-Level Grading Box PARTS LIST

ATI Corporation
New Holland, PA 17557
Phone (717) 354-8721 • FAX (717) 354-2162
1-800-342-0905
www.level-best.com

Figure 15. Laser Controls - Topcon

Item	Part No.	Qty	Description
1	001-001-052	2	Pole, Mast
2	001-001-053	4	Handle, Tee
3	000-200-070	2	Receiver, Laser, 360°, LS-B4
4	315-594-000	1	Mount, Mast Pole
5	LP	3	Bolt, Hex Head, 3/4"-16UNF x 1-3/4" Long
6	LP	3	Nut, Hex, Nylon Lock, 3/4"-16UNF
7	315-596-000	1	Bracket, Mounting, Manifold/Control Panel
8	315-574-000	1	Bracket, Mounting, Manifold/Control Panel, Single
9	LP	4	Bolt, Hex Head, 5/16"-18UNC x 7" Long
10	LP	4	Nut, Hex, Nylon Lock, 5/16"-18UNC
11	000-200-069	2	Panel, Control, System Five
12	LP	2	Washer, Flat, 3/8"
13	LP	2	Bolt, Hex Head, 3/8"-16UNC x 1" Long
14	000-166-489	1	Hydraulic Valve Assembly, See Breakdown Figure 6
15	000-200-171	1	Cable, Power/Remote/Solenoid, System Five & LS-B4, Topcon

AR - As Required NSS - Not Serviced Separately ASN - After Serial No. BSN - Before Serial No. LP - Local Purchase

ATI Corporation
New Holland, PA 17557
Phone (717) 354-8721 • FAX (717) 354-2162
1-800-342-0905
www.level-best.com

Para-Level Grading Box PARTS LIST

Figure 16. Laser Controls - Trimble GCR

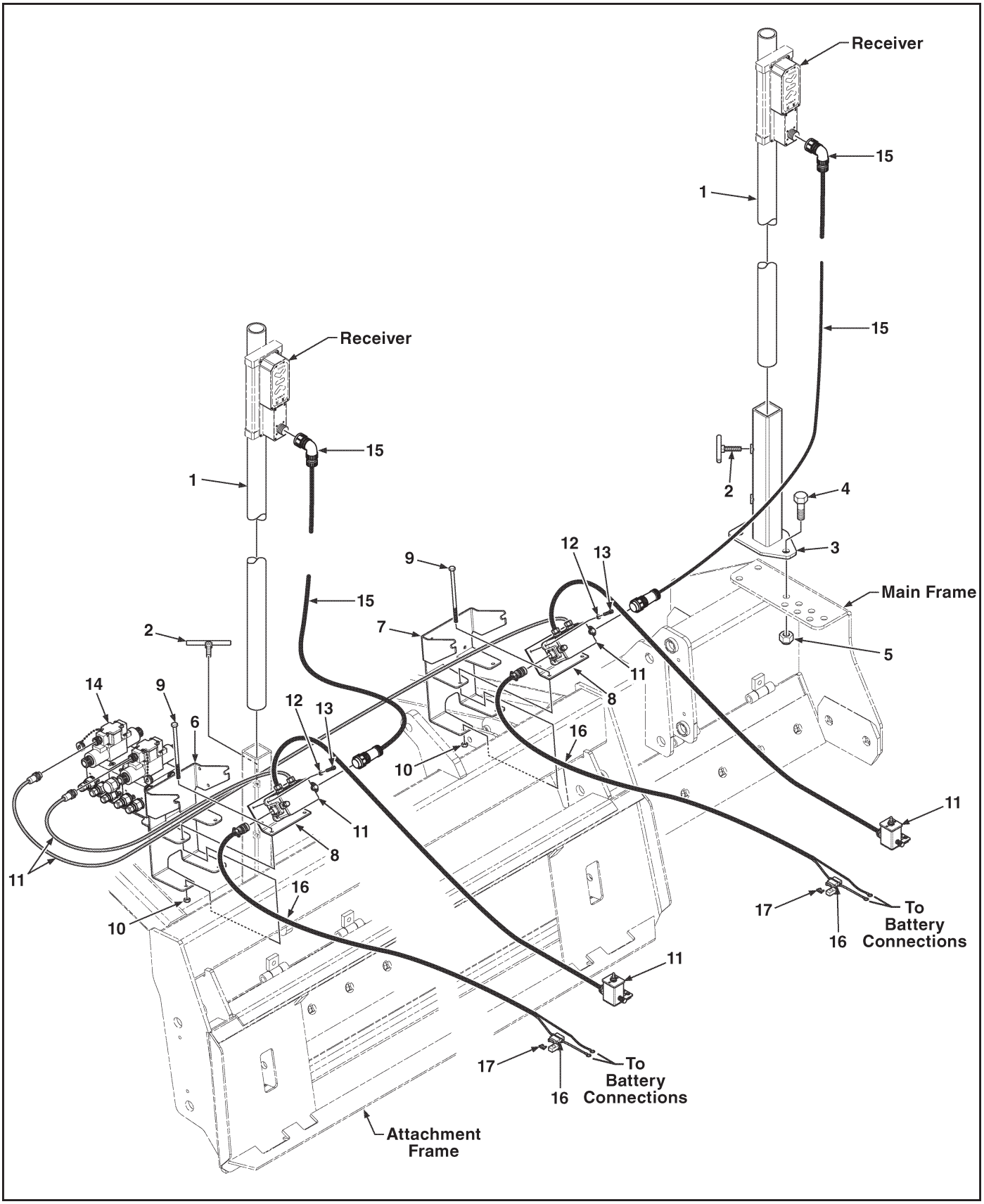

Para-Level Grading Box PARTS LIST

Figure 16. Laser Controls - Trimble GCR

ATI Corporation
New Holland, PA 17557
Phone (717) 354-8721 • FAX (717) 354-2162
1-800-342-0905
www.level-best.com

Item	Part No.	Qty	Description
1	001-001-052	2	Pole, Mast
2	001-001-053	2	Handle, Tee
3	315-594-000	1	Mount, Mast Pole
4	LP	3	Bolt, Hex Head, 3/4"-16UNF x 1-3/4" Long
5	LP	3	Nut, Hex, Nylon Lock, 3/4"-16UNF
6	315-596-000	1	Bracket, Mounting, Manifold/Control Panel
7	315-574-000	1	Bracket, Mounting, Manifold/Control Panel, Single
8	315-595-000	2	Plate, Mount
9	LP	4	Bolt, Hex Head, 5/16"-18UNC x 7" Long
10	LP	4	Nut, Hex, Nylon Lock, 5/16"-18UNC
11	000-200-086	2	Kit, Controls
12	LP	4	Washer, Flat, 1/4"
13	LP	4	Bolt, Socket Head, 1/4"-20UNC x 5/8" Long
14	000-166-489	1	Hydraulic Valve Assembly, See Breakdown Figure 6
15	000-200-129	1	Cable, Receiver
16	000-200-006	1	Cable, Power
17	LP	AR	Fuse, 10 Amp

AR - As Required NSS - Not Serviced Separately ASN - After Serial No. BSN - Before Serial No. LP - Local Purchase

ATI Corporation
New Holland, PA 17557
Phone (717) 354-8721 • FAX (717) 354-2162
1-800-342-0905
www.level-best.com

Para-Level Grading Box PARTS LIST

Figure 17. Optional Scarifier Assembly

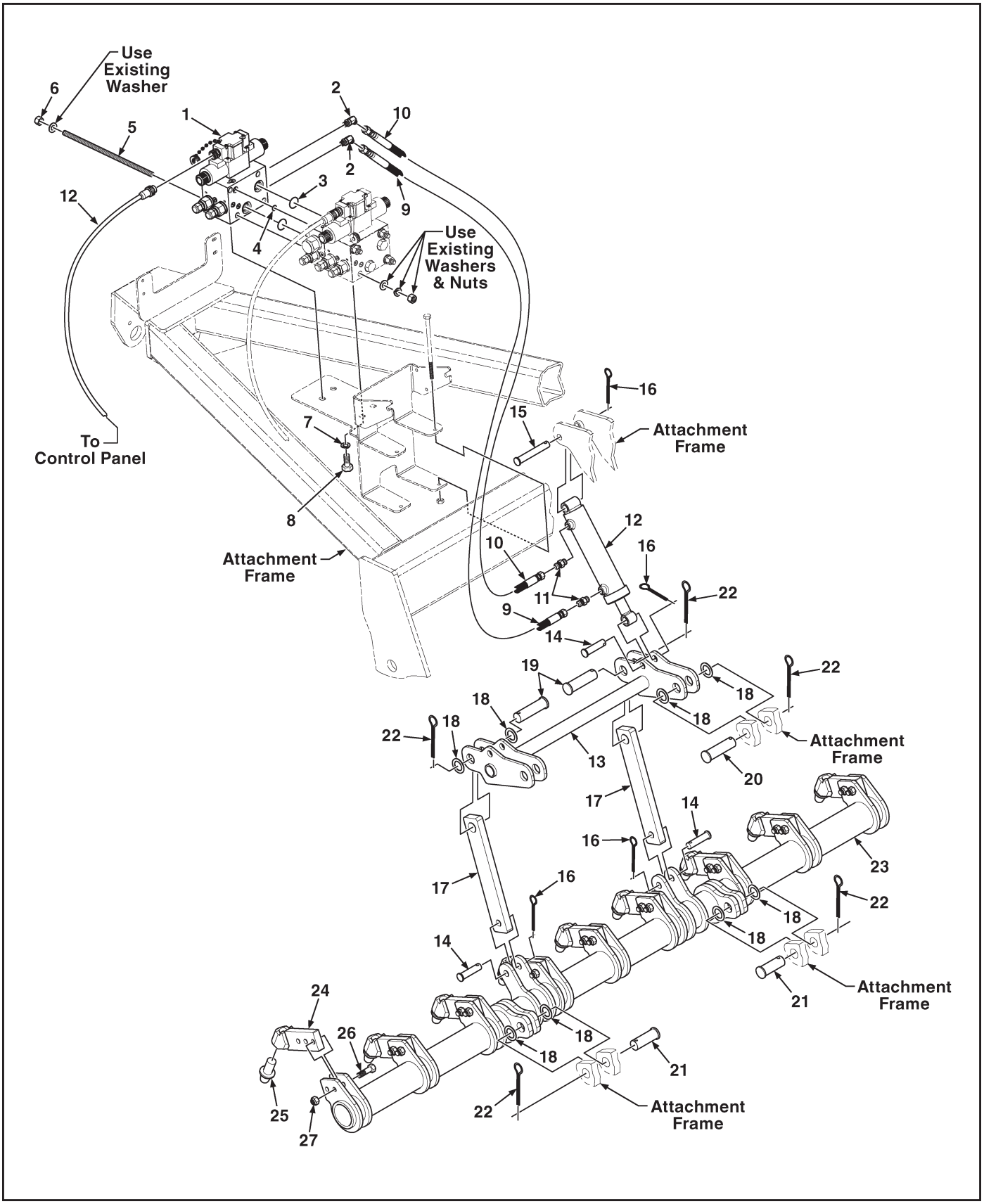

Para-Level Grading Box PARTS LIST

ATI Corporation
New Holland, PA 17557
Phone (717) 354-8721 • FAX (717) 354-2162
1-800-342-0905
www.level-best.com

Figure 17. Optional Scarifier Assembly

Item	Part No.	Qty	Description
1	000-166-512	1	Manifold Block, Secondary, Includes Item 2, See Breakdown Figure 6
2	000-166-175	2	Elbow, 45°, 6MJ x 6MB
3	LP	2	O-Ring, Dash 120
4	LP	1	O-Ring, Dash 112
5	LP	4	Rod, Threaded, 7/16"-20UNF x 10-1/8" Long (Without Slope-Tach Assembly)
	LP	4	Rod, Threaded, 7/16"-20UNF x 13-5/8" Long (With Slope-Tach Assembly)
6	LP	4	Nut, Hex, 7/16"-20UNF
7	LP	4	Washer, Lock, 1/2", SAE
8	LP	4	Bolt, Hex Head, 1/2"-11UNC x 1-1/4" Long
9	000-166-124	1	Hose Assembly, 1/4" Dia. x 30" Long x 4FJX x 6FJX
10	000-166-124	1	Hose Assembly, 1/4" Dia. x 30" Long x 4FJX x 6FJX
11	000-166-251	2	Adapter, Straight, 4MJ x 4MB
12	000-166-080	1	Cylinder Assembly, 1-3/4" Bore x 6" Stroke, See Breakdown Figure 20
13	315-571-000	1	Arm, Lift, Scarifier
14	000-161-007	3	Pin, Clevis, 5/8" Dia. x 2-1/2" Long
15	000-161-008	1	Pin, Clevis, 5/8" Dia. x 4" Long
16	000-161-026	4	Pin, Cotter, 5/32" Dia. x 1" Long
17	315-573-000	2	Link, Lift, Scarifier
18	000-155-003	8	Washer, Flat, 1" ID, 1-1/2" OD x 14 Gauge Thick
19	000-161-106	2	Pin, Clevis, 1" Dia. x 2-3/4" Long
20	000-161-021	4	Pin, Clevis, 1" Dia. x 4" Long
21	000-161-007	2	Pin, Clevis, 1" Dia. x 3-1/2" Long
22	000-161-031	6	Pin, Cotter, 3/16" Dia. x 1-1/2" Long
23	315-569-100	1	Frame, Scarifier, 6'
	315-570-100	1	Frame, Scarifier, 7' & 8'
24	315-569-150	AR	Tooth, Carbide Scarifier, Includes Item 25
25	001-001-054	AR	Bit, Carbide
26	LP	AR	Bolt, Hex Head, 7/16"-14UNC x 2-1/4" Long
27	LP	AR	Nut, Hex, Nylon Lock, 7/16"-14UNC

AR - As Required NSS - Not Serviced Separately ASN - After Serial No. BSN - Before Serial No. LP - Local Purchase

ATI Corporation
New Holland, PA 17557
Phone (717) 354-8721 • FAX (717) 354-2162
1-800-342-0905
www.level-best.com

Para-Level Grading Box PARTS LIST

Figure 18. Cylinder Assembly, 3" Bore x 6" Stroke

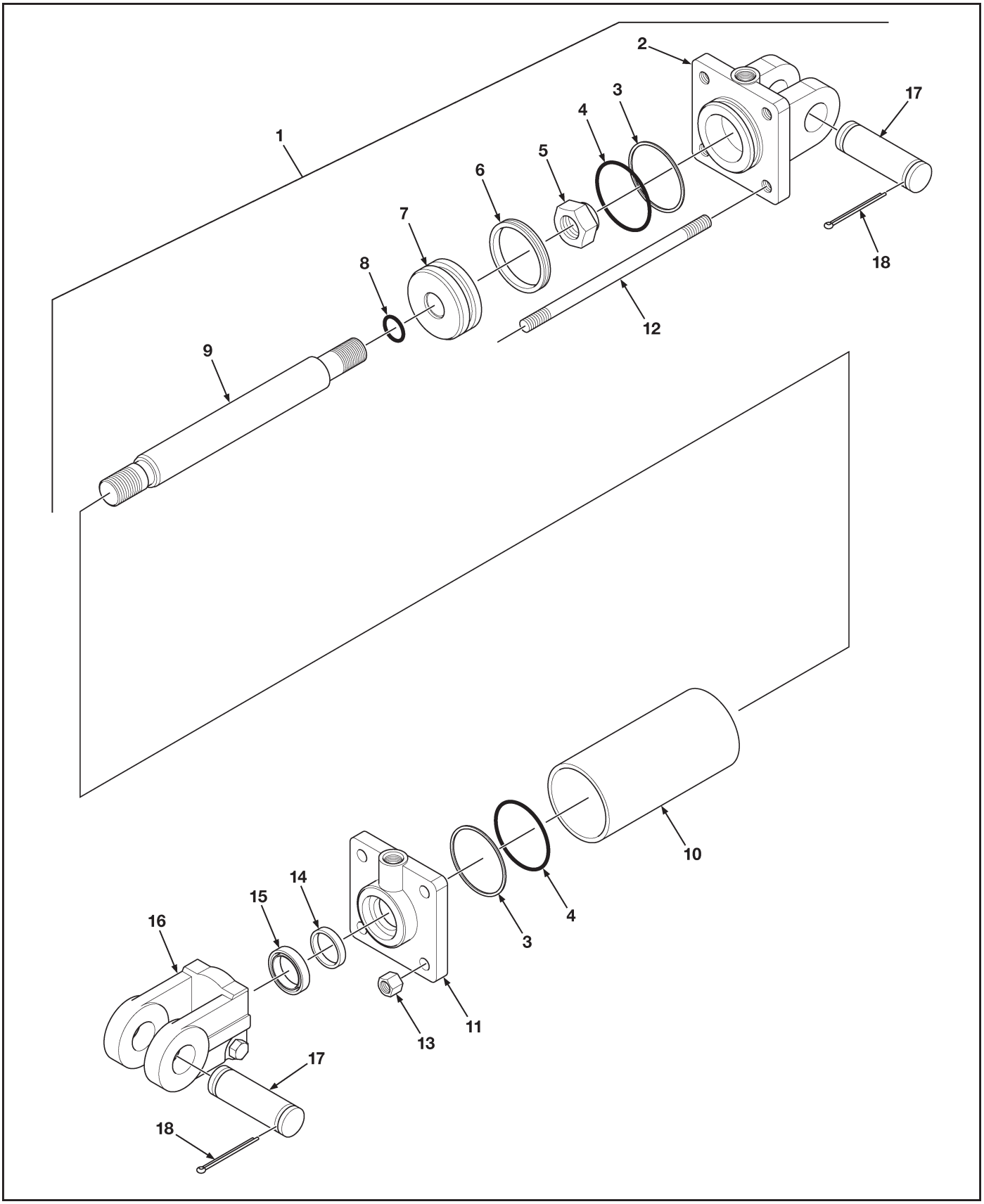

Para-Level Grading Box PARTS LIST

Figure 18. Cylinder Assembly, 3" Bore x 6" Stroke

ATI Corporation
New Holland, PA 17557
Phone (717) 354-8721 • FAX (717) 354-2162
1-800-342-0905
www.level-best.com

Item	Part No.	Qty	Description
1	000-166-181	1	Cylinder Assembly, 3" Bore x 6" Stroke, Includes Items 2 thru 18
2	000-166-322	1	Butt Assembly
3	NSS	2	Ring, Back Up
4	NSS	2	O-Ring
5	000-158-195	1	Nut, Lock
6	NSS	1	Seal, Crown
7	000-166-326	1	Piston
8	NSS	1	O-Ring
9	000-166-328	1	Rod Assembly
10	000-166-329	1	Tube
11	000-166-330	1	Gland
12	000-166-331	4	Tie Rod Assembly, Includes Item 13
13	NSS	4	Nut, Hex, Tie Rod
14	NSS	1	Seal, U-Cup
15	NSS	1	Seal, Wiper
16	000-166-334	1	Clevis Assembly
17	000-161-068	2	Pin, Cylinder, 1" Dia. x 3-3/8" Long
18	LP	4	Pin, Cotter, 3/16" Dia. x 1-3/4" Long
	000-166-207	AR	Kit, Cylinder Repair Includes: Items 3, 4, 6, 8, 14 & 15

AR - As Required NSS - Not Serviced Separately ASN - After Serial No. BSN - Before Serial No. LP - Local Purchase

ATI Corporation
New Holland, PA 17557
Phone (717) 354-8721 • FAX (717) 354-2162
1-800-342-0905
www.level-best.com

Para-Level Grading Box PARTS LIST

Figure 19. Cylinder Assembly, 2-1/4" Bore x 6" Stroke

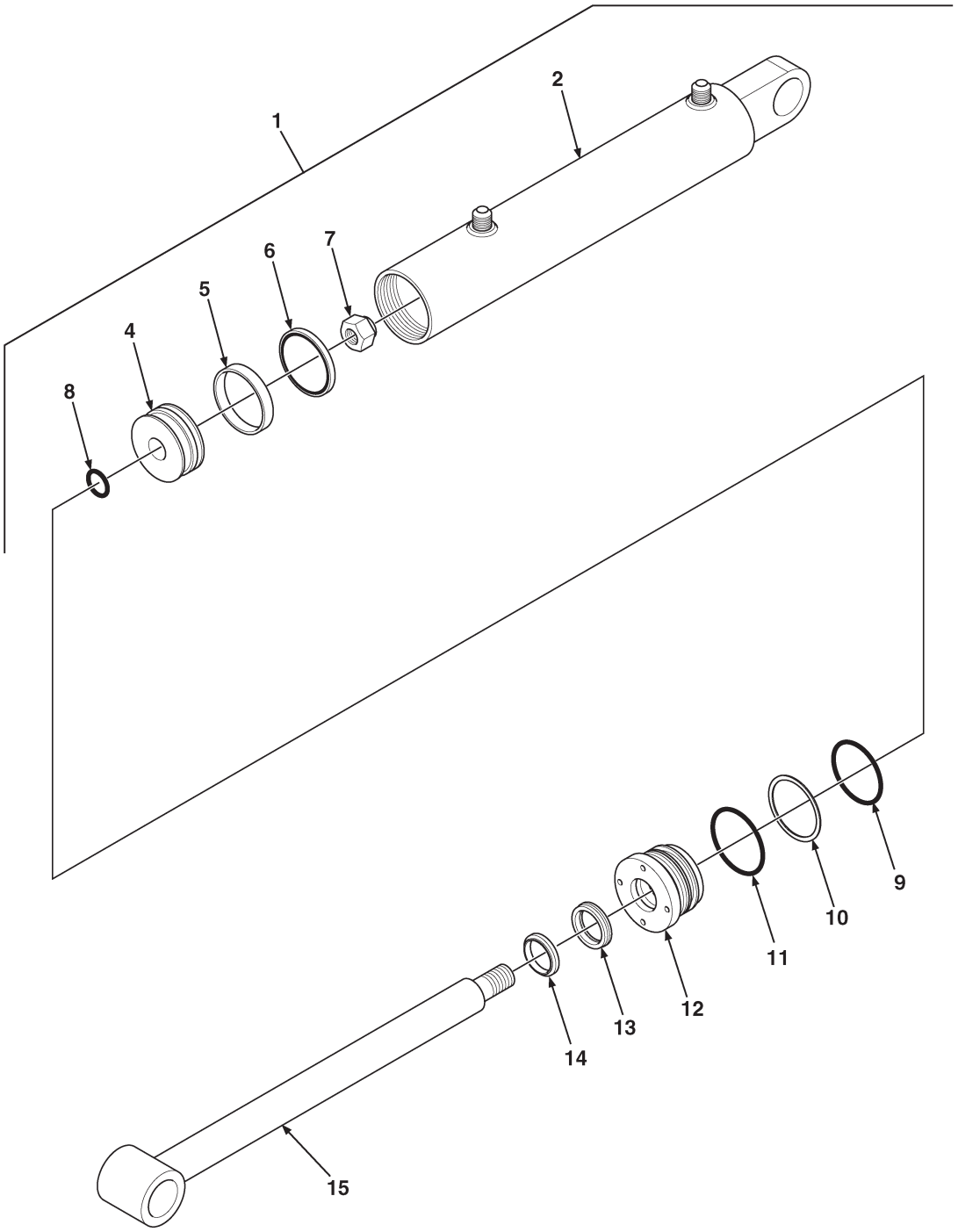

Para-Level Grading Box PARTS LIST

Figure 19. Cylinder Assembly, 2-1/4" Bore x 6" Stroke

ATI Corporation
New Holland, PA 17557
Phone (717) 354-8721 • FAX (717) 354-2162
1-800-342-0905
www.level-best.com

Item	Part No.	Qty	Description
1	000-166-465	1	Cylinder Assembly, 2-1/4" Bore x 6" Stroke, Includes Items 2 thru 14
2	000-166-490	1	Barrel Assembly
3	000-166-491	1	Piston
4	NSS	1	Seal, Crown
5	NSS	1	Ring, Bearing
6	LP	1	Nut, Lock
7	NSS	1	O-Ring
8	NSS	1	O-Ring
9	NSS	1	Washer, Back-Up
10	NSS	1	O-Ring
11	000-166-492	1	Gland, Threaded
12	NSS	1	Seal, U-Cup
13	NSS	1	Wiper
14	000-166-493	1	Rod Assembly
	000-166-494	AR	Kit; Cylinder Repair, Includes: Items 5, 6, 8 thru 11, 13 & 14

AR - As Required NSS - Not Serviced Separately ASN - After Serial No. BSN - Before Serial No. LP - Local Purchase

ATI Corporation
New Holland, PA 17557
Phone (717) 354-8721 • FAX (717) 354-2162
1-800-342-0905
www.level-best.com

Para-Level Grading Box PARTS LIST

Figure 20. Cylinder Assembly, 1-3/4" Bore x 6" Stroke

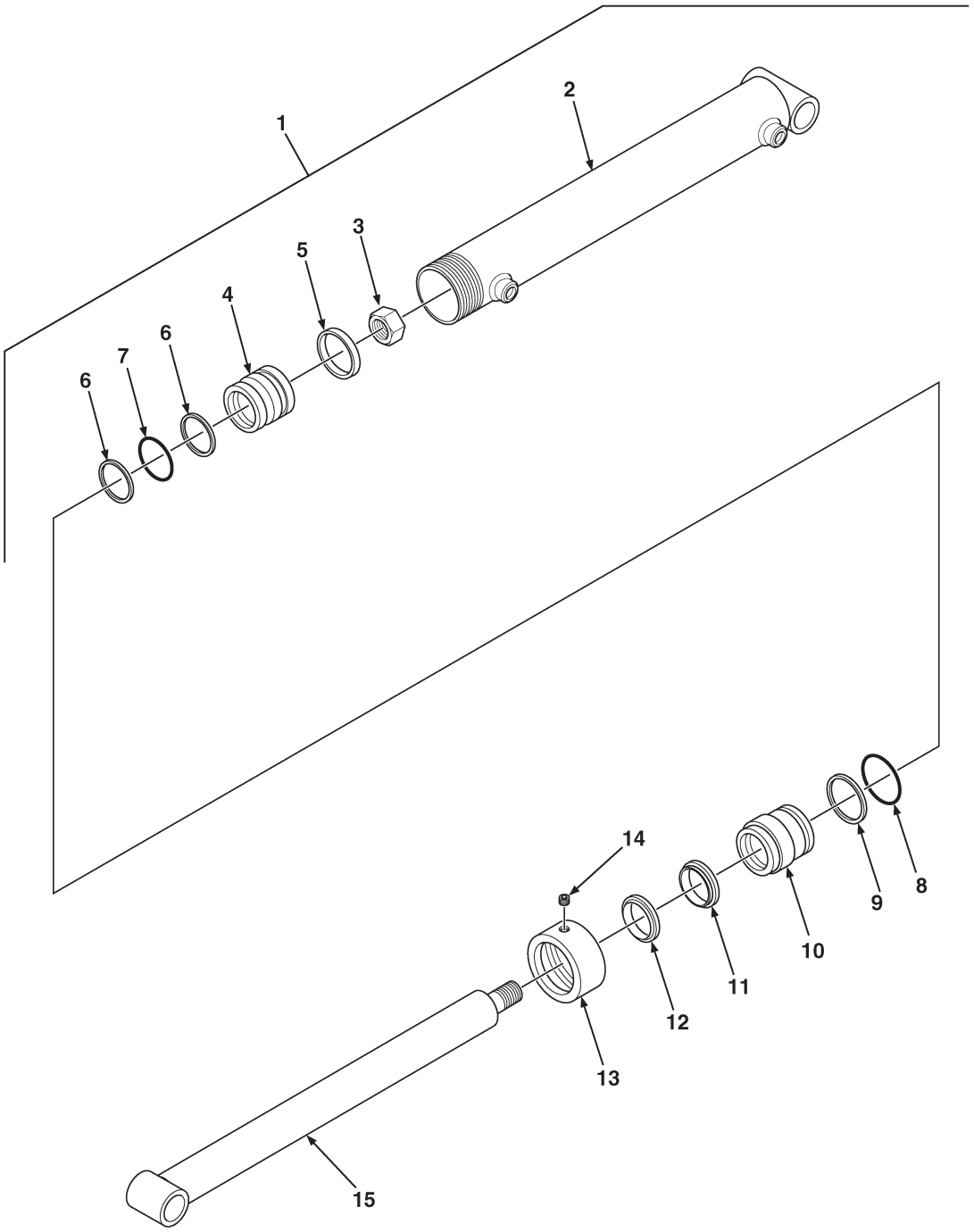

Para-Level Grading Box PARTS LIST

Figure 20. Cylinder Assembly, 1-3/4" Bore x 6" Stroke

ATI Corporation
New Holland, PA 17557
Phone (717) 354-8721 • FAX (717) 354-2162
1-800-342-0905
www.level-best.com

Item	Part No.	Qty	Description
1	000-166-080	1	Cylinder Assembly, 1-3/4" Bore x 6" Stroke Includes Items 2 thru 15
2	000-166-086	1	Barrel Assembly
3	LP	1	Nut, Lock, 1/2"-20UNF
4	000-166-087	1	Piston
5	NSS	1	Uniring
6	NSS	2	Ring, Back Up
7	NSS	1	O-Ring
8	NSS	1	O-Ring
9	NSS	1	Ring, Back Up
10	000-166-088	1	Head, Threaded Cap
11	NSS	1	U-Cup, Loaded
12	NSS	1	Wiper, Rod
13	000-166-089	1	Cap, Threaded
14	LP	1	Screw, Set, 1/4"-20UNC x 1/4" Long
15	000-166-090	1	Rod Assembly
	000-166-085	AR	Kit, Cylinder Repair Includes: Items 5 thru 9, 11 & 12

AR - As Required NSS - Not Serviced Separately ASN - After Serial No. BSN - Before Serial No. LP - Local Purchase

ATI Corporation
New Holland, PA 17557
Phone (717) 354-8721 • FAX (717) 354-2162
1-800-342-0905
www.level-best.com

Para-Level Grading Box PARTS LIST

Figure 21. Decals

Para-Level Grading Box PARTS LIST

ATI Corporation
New Holland, PA 17557
Phone (717) 354-8721 • FAX (717) 354-2162
1-800-342-0905
www.level-best.com

Figure 21. Decals

Item	Part No.	Qty	Description
1	000-186-045	2	Decal, Level Best Logo
2	000-186-041	1	Decal, Warning, High-Pressure
3	000-186-051	2	Decal, Danger, Pinch Point
4	000-186-047	2	Decal, Danger, This Machine Starts & Stops Automatically
5	000-186-048	2	Decal, Made in U.S.A.
6	000-186-035	1	Plate, Model/Serial, Adhesive Back
7	LP	AR	Skid Grip

AR - As Required NSS - Not Serviced Separately ASN - After Serial No. BSN - Before Serial No. LP - Local Purchase